BRNO UNIVERSITY OF TECHNOLOGY

FACULTY OF MECHANICAL ENGINEERING

SUSTAINABLE PROCESS INTEGRATION LABORATORY – SPIL

Dr Timothy G. Walmsley, CEng

Process Integration for Individual Processes, Industrial Sites, and Macro Energy Systems

HABILITATION THESIS

BRNO 2018

ABSTRACT

This thesis showcases the research contribution of Dr Timothy G. Walmsley to the field of Process Systems Engineering with emphasis on Process Integration. The Process Integration research has been undertaken for individual processes, Total Sites, and Regional and National Energy systems. The thesis contains brief descriptions of 40 research articles with published and submitted full-text articles in the Appendix. The research portfolio was conducted at the University of Waikato in Hamilton, New Zealand in the Energy Research Centre and most recently at Brno University of Technology in the Sustainable Process Integration Laboratory – SPIL team. In total, Dr Walmsley has contributed to 66 published or accepted indexed articles with DOI as well as a further 6 submissions currently under review for Impact Factor journals. Of these articles, 29 articles have been submitted and/or published while working in SPIL at Brno University of Technology with the balance published while at the University of Waikato. In addition to the presented publications, the author has contributed to a further 32 indexed articles with DOI.

Keywords

Process Integration, Pinch Analysis, Total Site, Process Optimisation, Process Modelling, Fouling, Milk Powder, P-graph,

CONTENTS

ABSTRACT I

Keywords I

CHAPTER 1 INTRODUCTION 1

1.1 Background 1

1.2 Thesis Structure 3

CHAPTER 2 RESEARCH FIELDS OF INTEREST 5

2.1 Overview 5

2.2 Process Integration and Optimisation of Unit Operations 6

2.3 Total Site Integration 6

2.4 Macro Energy Planning and Integration 6

CHAPTER 3 PROCESS INTEGRATION AND OPTIMISATION OF UNIT OPERATIONS 9

3.1 Novel and Innovative Methods 9

3.1.1 The Cost Derivative Method (CDM) for New Heat Exchanger Networks 9

3.1.2 New Heat Exchanger Network Retrofit Method based on Bridge Analysis 12

3.1.3 New Exergy Pinch Analysis Method for Sub-Ambient Processes 15

3.2 Case Studies 16

3.2.1 Unit Operation Energy Integration and Optimisation in Milk Evaporation Systems 17

3.2.2 Integration and Optimisation of Milk Spray Dryers 19

3.2.3 Fouling on Milk Dryer Exhaust Heat Transfer Surfaces 21

CHAPTER 4 TOTAL SITE INTEGRATION 25

4.1 Novel and Innovative Methods 25

4.1.1 Total Site Heat Integration Concepts for Waste Heat Recovery 25

4.1.2 A Total Site Heat Integration Design Method for Integrated Evaporation Systems Including Vapour Recompression 28
4.1.3 Unified Total Site Heat Integration 29
4.1.4 Total Site Mass, Heat and Power Integration Using Process Integration and Process Graph 32

4.2 Case Studies 34
4.2.1 Total Site Heat Integration and Optimisation of Milk Powder Production 34
4.2.2 Heat Recovery Loops for Site-wide Dairy Factory Heat Integration 38
4.2.3 Total Site Utility Systems Design using P-graph 41

CHAPTER 5 MACRO ENERGY PLANNING AND INTEGRATION 43

5.1 Novel and Innovative Methods 43
5.1.1 Energy Ratio Analysis and Accounting for Renewable and Non-Renewable Electricity Generation 43
5.1.2 Networks for Utilising the Organic and Dry Fractions of Municipal Waste: P-graph Approach 45

5.2 Case Studies 47
5.2.1 New Zealand Energy Sector Planning for GHG Emissions Reductions 47
5.2.2 Energy Return on Energy and Carbon Investment of Wind Energy Farms: A Case Study of New Zealand 51

REFERENCES 55

LIST OF APPENDED ARTICLES 63

CHAPTER 1
INTRODUCTION

1.1 Background

Process Integration

In the 1970's, the world oil crisis drove innovation in the industrial sector resulting in vast improvements in thermal energy efficiency for many large energy users in chemical processing. The oil crisis gave life and purpose to the research area of Process Integration (PI). The PI concept embodies a holistic approach to process design that emphasises the system-wide performance over individual sub-system efficiency. Under the PI paradigm, individual sub-systems are engineered from the outset to fit together in such a way that is advantageous to the whole. The PI methodology addresses the design of both new systems as well as the retrofit and revamp of existing processes.

PI plays a key role in addressing energy and resource efficiency and sustainability improvement in the process industries as well as macro energy systems [1]. There are three approaches to PI [2]: (1) graphical methods including Pinch Analysis (PA) that are based on thermodynamics, (2) Mathematical Programming (MP) methods, and (3) hybrid approaches. Application of PI techniques to a wide variety of industries and multiple scales have helped realise meaningful increases in system performances for individual processes, Total Sites, and macro energy systems [3].

PA is an elegant insight and graphical technique for Heat Integration (HI) targeting and Heat Exchanger Network (HEN) design [4]. It has been well-utilised in the process industry as a tool to maximise energy saving and heat recovery within the individual process units [5]. An important strength of the PA approach to PI is the targeting stage where important performance targets are determined prior to the design stage. Establishment of meaningful and achievable targets provides critical guidance in the design stage to the engineer of the performance limitations and inherent compromises within a system. On the other hand, Mathematical Programming typically solves network superstructures to find feasible and optimal designs. MP combines algorithmic methods with fundamental design concepts [6]. It is capable of optimising both single- and multi-objective problems including HEN retrofit [7].

Total Site Integration

Total Site Heat Integration (TSHI) was initially introduced by Dhole and Linnhoff [8]. TSHI is a strategy for the integration of large multi-process sites to improve site-wide energy efficiency that has focused on exploiting the steam utility system to recover and place heat [9]. The method prioritises integration of individual processes and zones (i.e. defined areas of integrity [10]), before integrating across an entire site using the utility system [11]. Total Site (TS) source and sink profiles are composites of shifted Grand Composite Curves (GCC) from individual processes and applied to calculate TS targets for heat recovery, utility use, and shaft work/power generation [12]. Shortly after its initial development, Klemeš et al. [9] summarised successful applications of TSHI to an acrylic polymer manufacturing plant, several oil refineries and a tissue paper mill, which all showed utility savings between 20 – 30 %. The PhD thesis of Raissi [13] presents much of the early developments of TSHI.

Site-wide integration through TSHI has recently led to increasing utility savings in slaughter and meat processing by 35 % [14], large industrial parks in Japan about 53 % [15] and Thailand by 28 % [16], chemical processing clusters by 42 % [17], and Kraft pulp mills about 13 % [18]. Notable developments to the TSHI method include: temperature shifting using process [19] and stream [20] specific minimum approach temperatures, application to Locally Integrated Energy Sectors [21], heat exchange restrictions [22], seasonal energy availability [23], centralised utility system planning [24], retrofit investigations in TS [25], process modifications [26], minimisation of thermal oil flowrate in hot oil loops [27], heat transfer enhancement in site level heat recovery systems [28], variable energy availability [29], and TS utility system targeting [30]. There are also MP approaches to TSHI [31] including its retrofit [32].

Energy Systems Planning

PI also applies to macro energy system planning. Carbon Emissions Pinch Analysis (CEPA) was first developed by Tan and Foo [33] and is based on the application of traditional PA techniques to broader macro-scale applications such as regional and national electricity generation sectors [34]. Sectorial and regional studies have been conducted for power systems emissions constraint planning with CCS [35] and for multi-period scenarios [36] and variable CO_2 sources and CO_2 sinks [37]. In the New Zealand context, CEPA has been applied to the national electricity sector [38] to show how increased electricity demand in 2050 can be met and the generation mix optimised for minimum energy cost (Walmsley et al., 2014). Energy costs were based on the Pinch Analysis of Energy Return on Investment (EROI).

EROI was proposed by Hall et al. [40] and continues to be the subject of ongoing research in recent literature [41]. Conceptually, EROI is simple. It compares the amount of useful energy derived compared to the amount of energy expended to process, generate, and distribute the useful energy. As a common example, crude oil extraction with an EROI of, say, 100, would represent that the energy equivalent of 1 barrel of oil, in various forms such as embedded energy and electricity to drive pump shafts, is required to extract 100 barrels of crude oil. The EROI concept has found a wide variety of applications [42]. EROI, as a metric representing an energy resource, has been linked to the quality of life [43]. Weißbach et al. [44] suggested the minimum acceptable EROI is 7, below which there is an insufficient return to justify action. It has been applied to try to explain the decline in oil production from the viewpoint that as conventional oil runs out, unconventional oil reserves will be more energy intensive to access, which will result in lower financial returns of investments [45]. Similarly, a correlation between oil prices and EROI over time has been attempted [46]. These applications highlight the benefits of knowing and understanding the EROI for different natural resources.

Minimising GHG footprint through CEPA and maximising the EROI are often competing objectives. Effective production of energy with high EROI values is crucial to economic growth, industrial manufacturing, employment and the general economic well-being of citizens [47]. CEPA, on the other hand, quantifies the environmental impact in terms of emissions of using energy. CEPA is a graphical method for showing how much carbon emissions are contributed from each part of an energy sector (e.g. electricity, transport) and exploring possible pathways for modifying the energy system to meet fixed emissions targets.

1.2 Thesis Structure

Chapter 2 presents an overview of the research fields of interest. In Chapters 3, 4, and 5, the contributions to literature are divided by the scale of application. Within each of these chapters, the research contributions are divided into (1) Novel and Innovation Methods and (2) Case Studies. Chapter 3 encompasses research that addresses the PI of individual unit operations. The major line of work focused on milk powder production energy efficiency with the creation of novel methodology being an offshoot of detailed case studies. Chapter 4 elevates the PI focus to the Total Site level. Several contributions have been made in this area with the most significant being the application of novel Total Site methods for low-temperature sites that use hot water as a standard utility. Chapter 5 showcases contributions that deal with macro energy systems integration and planning. The contributions in Chapter 5 centre around the extension and application of Pinch

Analysis and Energy Ratio analysis to sustainable energy planning with a focus on the New Zealand energy sectors of electricity, transport and process heat.

CHAPTER 2

RESEARCH FIELDS OF INTEREST

2.1 Overview

Process Integration (PI) is the systematic process and art of engineering process, utility, regional, and national systems as a single entity that respects practical constraints to reach maximum levels of energy and resource conversation. Figure 1 illustrates this point using puzzle pieces. With the appropriate design of process systems to optimally fit together with the utility and energy supply systems including renewable energy, the performance of the entire system can be raised. The principles of PI apply from the process level through to the national and global energy system levels. To maximise benefits, design decisions at every level need to be considered and optimised within the context of the greater whole.

Figure 1: The integration of process, utility and energy supply systems for maximum overall performance.

The research presented in this thesis focused on applying novel and innovate process analysis, modelling, integration, and optimisation techniques for the integrated design of sustainable process and energy systems. The scales of application include individual unit operations, Total Sites, and regional and national energy sectors. The research is the result of on-going collaborations with researchers from the University of Waikato (New Zealand), Universiti Teknologi Malaysia (Malaysia), University of Kassel (Germany), and Technische Hochschule Ingolstadt (Germany). The bulk of the research was undertaken at the University of Waikato, New Zealand before taking up his present

appointment at Brno University of Technology as a researcher in the Sustainable Process Integration Laboratory – SPIL team.

2.2 Process Integration and Optimisation of Unit Operations

At the process level, novel methods include: (1) a derivative approach for determining the cost-optimal area allocation within a Heat Exchanger Networks; (2) Heat Exchanger Network retrofit methods including graphical and tabular tools as well as automation for scalability; (3) improved numerical and graphical procedures to meaningfully determine targets for exergy requirement, rejection, and loss. These methods have been applied to several case studies to realise radical step-improvement opportunities in energy efficiency. The main case studies include (1) the integration and optimisation of milk evaporation system through the appropriate placement of vapour recompression, (2) the integration of milk spray dryers through conventional heat recovery and novel heat pump designs, and (3) experimental and numerical analysis of milk powder fouling – a key barrier that prevents full realisation of milk spray dryer energy recovery.

2.3 Total Site Integration

At the Total Site level, the research interests focused on advancing the application of TSHI concepts to low-temperature processing sites such as dairy, meat, and pulp and paper factories. The research has developed several novel and innovative methods including (1) TSHI concepts for waste heat recovery through the application of heat pumps, absorption chillers, and assisted integration, (2) an integrated design method for multi-effect evaporation systems with vapour recompression operations, (3) the Unified TSHI method for targeting, optimising and designing Heat Exchanger Networks for sites that use non-isothermal utility, and (4) an extend TS method covering mass, heat and power integration through the combination of TSHI and P-graph. The case studies in this area cover (1) TSHI of single and multi-plant dairy factories, (2) Heat Recovery Loops for site-wide dairy factory heat integration, and (3) Total Site utility systems design using P-graph with consideration for an electricity spot-price and environmental impacts such as GHG emissions, particulates (P_{10}) and water use.

2.4 Macro Energy Planning and Integration

At the macro-level, several methods for energy planning, linking Carbon Emissions Pinch Analysis with Energy Return on Investment, as well as advancing the understanding and application of Energy Ratios as energy planning metrics have been developed. In

addition, a P-graph based targeting method for municipal waste-to-energy networks has recently been formulated. A series of case studies in this area focused on the New Zealand energy sectors with comprehensive analysis and energy planning for the electricity, transport and process heat sectors. An additional case study on the wind energy potential for electricity generation in New Zealand was also undertaken.

CHAPTER 3
PROCESS INTEGRATION AND OPTIMISATION OF UNIT OPERATIONS

3.1 Novel and Innovative Methods

The reported novel and innovative methods for the integration, optimisation, and retrofit of unit operations centre on three areas: greenfield HEN design using the new Cost Derivative Method (3.1.1), a new and automated HEN retrofit method (3.1.2), and a new method of determination of process exergy targets (3.1.3).

3.1.1 The Cost Derivative Method (CDM) for New Heat Exchanger Networks

Pinch Analysis applies fundamental thermodynamic principles to identify temperatures that constrain process heat recovery assuming a minimum approach temperature, ΔT_{min}. But the ΔT_{min} constraint for most problems results in non-cost optimal HEN area allocation due to differences in utility costs, stream heat transfer film coefficients, HE types and flow arrangements, HE capital costs, and approach temperatures. To an extent the ΔT contribution concept for individual streams, in place of a global ΔT_{min}, was developed to account for large differences in film coefficients, although optimal area allocation is not ensured by this method. Simple methods for ΔT_{min} relaxation through dual minimum approach temperatures, where one ΔT_{min} is selected for heat recovery targeting and the other ΔT_{min} is applied to individual exchangers, were also proposed [48].

To solve the challenge of optimal area allocation, almost all literature relies on Mathematical Programming. As a review of standard MP methods, Escobar and Trierweiler [49] summarised the various approaches to HEN synthesis using linear programming, non-linear programming, mixed integer linear programming, and mixed integer non-linear programming, together with the major solution algorithms relating to these classes. An alternate approach is to use a derivative approach. One of the very few studies that attempted to apply the necessary conditions of optimal area allocation was by Ait-Ali and Wade [50]. They derived conditions to determine the optimal heat recovery area allocation in multi-stage heat exchanger systems with any number of exchangers in series. The derivation was based on the Log-Mean Temperature Difference heat exchanger design method. Limitations of the method are that it only applies to multi-stage heat exchanger systems -- not HEN's in general -- and assumes

counterflow heat transfer. The focus is directed towards achieving maximum heat recovery for a given total area, which does not necessarily equate to minimum total cost.

This contribution of the author to this area is captured by Article 1[1] in the Appendix. This paper presented a novel Cost Derivative Method for finding the optimal area allocation for a fixed Heat Exchanger Network topology to achieve minimum total cost. The concept of the novel approach was to incrementally add, remove and shift heat transfer area to exchangers where the greatest economic benefits are returned, as shown in Figure 1. To allow the use of derivatives, the method focused on the variable cost component for heat exchangers with the assumption that fixed costs are a constant for a given HEN. This meant the cost function with respect to the area of the heat exchanger in a network became continuous and possible to solve using derivatives.

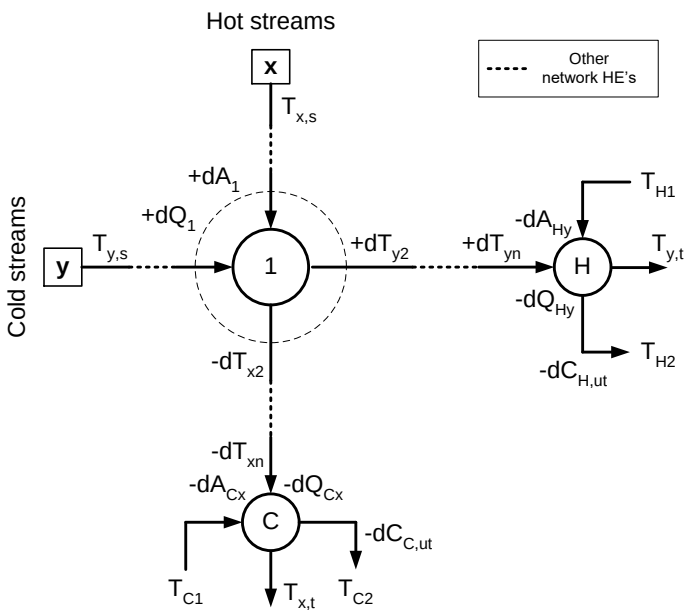

Figure 1: Impact of increasing the area of recovery exchanger 1 by dA.

Figure 1 illustrates the effects of increasing the area of RE_1 by a very small amount, i.e. *dA*, on the exit temperatures from RE_1, which propagates to downstream RE's. As the change in stream temperatures, dT_{y2} and dT_{x2}, flows on to the next network RE, it affects the RE's duty and outlet temperatures. Eventually, the change in temperature propagates to a UE affecting is required utility load and design area.

The Total Cost function in derivate form may be written as

[1] **Article 1:** Walmsley, T.G., Walmsley, M.R.W., Morrison, A.S., Atkins, M.J., Neale, J.R., 2014. A derivative based method for cost optimal area allocation in heat exchanger networks. Applied Thermal Engineering 70, 1084–1096. DOI: 10.1016/j.applthermaleng.2014.03.044

$$\frac{dTC}{dA_j} = \frac{dCC_j}{dA_j} + \sum \frac{dCC_{ut(i)}}{dA_j} - \sum \frac{dS_{ut(i)}}{dA_j} \quad (1)$$

By setting dTC/dA_j to zero the cost "optimum" area for RE_j may be solved. In the context of a network, the optimal area allocation is located when all heat exchangers obtain values of $dTC/dA_j = 0$. Each component of Eq. 1 was then analysed to derive the Cost Derivative Method. As a key part of the method, it was found that the slope of the ε-NTU relationship for the specific heat exchanger type, in combination with the difference in exchanger inlet temperatures and the overall heat transfer coefficient, is critical to calculating the additional overall duty each incremental area element returns.

To illustrate the method, the Cost Derivative Method was applied to a well-known simple distillation process. Table 1 compares the results for the Cost Derivative Method to the Pinch Design Method as well as four solutions generated by Non-Linear Programming, Superstructure, Hyperstructure and Synheat methods given in Escobar and Trierweiler [49]. The Cost Derivative Method solution required 11 % less HEN area, recovered a similar quantity of heat, and saved 7.6 % of the total cost when compared to the PDM with ΔT_{min} = 12.5 °C. The programming synthesis methods also developed new HEN structures that reduced total cost. However, the programming methods increased network complexity as indicated by the increased number of stream splits and exchanger units, whereas the Cost Derivative Method used the identical HEN structure.

Table 1: Comparison of heat integration solutions for the distillation process. Non-Linear Programming (NLP), Superstructure, Hyperstructure and Synheat solutions are taken from Escobar & Trierweiler [49].

	CDM	PDM (ΔT_{min} opt.)	PDM	NLP	Super-structure	Hyper-structure	Synheat model
ΔT_{min} (°C)	7.3	12.5	10.0	10.0	10.0	6.9	9.9
RE	4	4	4	4	4	4	5
UE	3	3	3	3	2	2	2
Splits	0	0	0	2	2	4	3
ΣA (m^2)	952	1,067	1,244	1,170	1,148	1,105	1,065
Q_r (MW)	5,072	4,998	5,100	5,100	5,100	5,100	5,100
CC ($/y)	222,037	235,242	261,486	251,120	247,842	232,927	239,047
UC ($/y)	134,139	150,396	128,000	128,000	128,000	128,000	128,000
***TC* ($/y)**	**356,176**	**385,638**	**389,486**	**379,120**	**375,842**	**360,927**	**367,047**

3.1.2 New Heat Exchanger Network Retrofit Method based on Bridge Analysis

Graphical and diagrammatical tools elevate the level of insight for the engineer into the thermodynamic and practical limitations to Process Heat Integration and HEN retrofit. As a result, problems may be decomposed into more understandable problems. In addition, retrofit tools also provide an effective platform to communicate engineered solutions to industrial companies. However, a severe limitation of these tools is poor scalability. Large-scale HENs present a challenge as insights gained at a small-scale are more obscure for large HENs. A degree of automation of insight-based retrofit procedures including heuristics is needed to help extend its application of large-scale HENs and to minimise human error during the analysis procedure.

In this area, the contribution has been two-fold. First, an attempt has been made to improve the graphical representation of the HEN retrofit problem [51] while also providing the numerical alternative [52]. These studies recently culminated in two journal articles. The first article[2] focuses on improving a graphical technique called the Modified Energy Transfer Diagram (Figure 2). The second paper reports the development of the Automated Retrofit Targeting (ART) algorithm.

The Energy Transfer Diagram is a graphical methodology to represent a process and/or Heat Exchanger Network. For networks, the Energy Transfer Diagram contains valuable information about where in the network exist heat surpluses and deficits, after considering a global (or contribution) minimum approach temperature. The important advancement in this work was the identification of which segments of the Energy Transfer Diagram represent heat surplus/deficit within a heat exchanger and then to show this on the Energy Transfer Diagram. Further clarity is drawn from the labelling of what segments relate to which process stream. The construction of the modified Energy Transfer Diagram is presented in Figure 2. A simple four-stream problem with an existing HEN that falls 1,950 kW short of Pinch targets was used to demonstrate the methodological step forward. In the example, the initial network has a total of 5 heat exchangers and, after two bridge modifications, the Maximum Energy Recovery network is achieved, which requires 8 heat exchangers.

[2] **Article 2:** Lal, N., Walmsley, T.G., Walmsley, M.R.W., Atkins, M.J., Neale, J.R., 2018. A Novel Heat Exchanger Network Bridge Retrofit Method using the Modified Energy Transfer Diagram. Energy, 155, 190-204. DOI: 10.1016/j.energy.2018.05.019

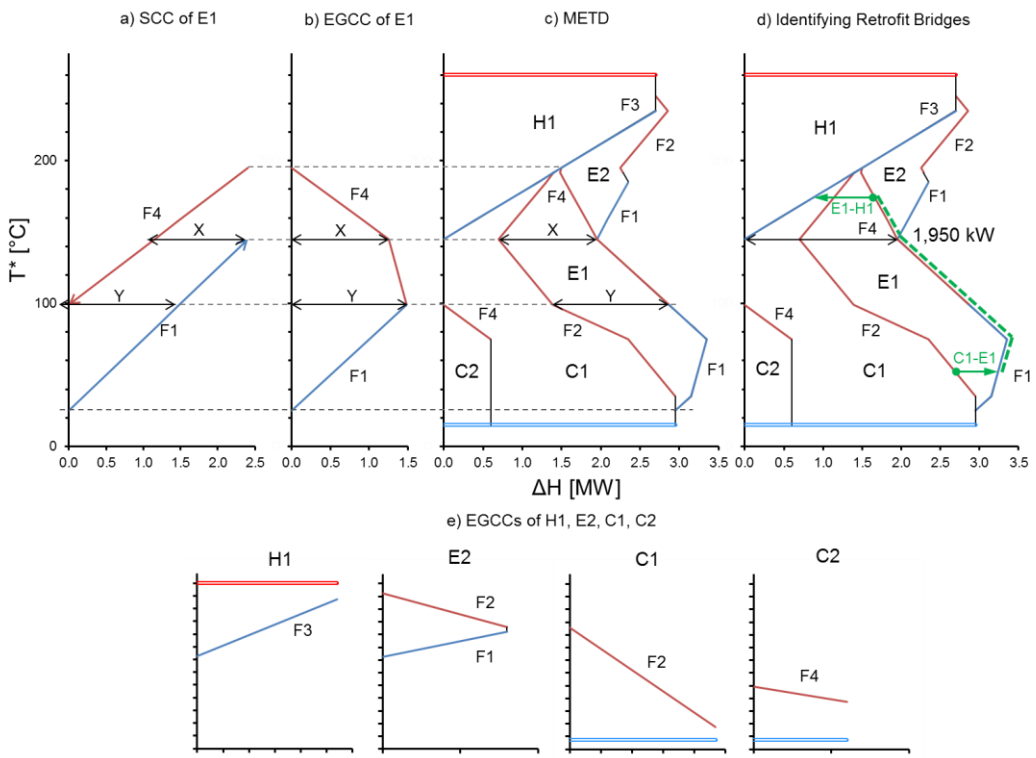

Figure 2: Development of the Modified Energy Transfer Diagram with the identification of one Retrofit Bridge option for the illustrative four-stream problem.

Implemented into Microsoft Excel™ with VBA, the proposed ART algorithm is sufficiently computationally efficient to help solve large-scale problems while still allowing user-driven selection. ART implements a recursive multi-loop search algorithm to quantify feasible and unique Retrofit Bridge options within a considered HEN. The search algorithm cycles through all feasible combinations and permutations of heat exchangers to generate numerous retrofit options in a step-wise fashion. Each retrofit option is required to include one cooler and one heater. In addition, a retrofit option can also include any number of recovery exchangers in any sequence. As a result, the hypothetical maximum number of unique Retrofit Bridges, including both thermodynamically feasible and infeasible, may be determined using

$$n_{max} = n_C\, n_H \left(1 + \sum_{k=1}^{n_R} \frac{n_R!}{(n_R - k)!} \right) \tag{2}$$

For application to large-scale HENs, it becomes prohibitive to check the feasibility of every possible retrofit permutation. As a result, logical checks were implemented. First, the thermodynamic feasibility is confirmed based on the maximum heat surplus temperatures compared to minimum heat deficit temperatures. Second, a threshold specific duty, q_{thres}, for the total heat recovery divided by the total number of retrofit

modifications is set. These constraints enabled solutions for the large-scale retrofit problem to be obtained.

To demonstrate the new method and tool, a refinery case study with 27 streams and 46 existing heat exchangers demonstrated the retrofit method's potential. For the case study, the Automated Retrofit Targeting algorithm found 68,903 feasible unique retrofit opportunities with a minimum 400 kW/unit threshold. The most promising retrofit project, Figure 3, required 3 new heat exchanger units to achieve a heat savings of 4.24 MW with a favourable annualised profit and a reasonable payback period.

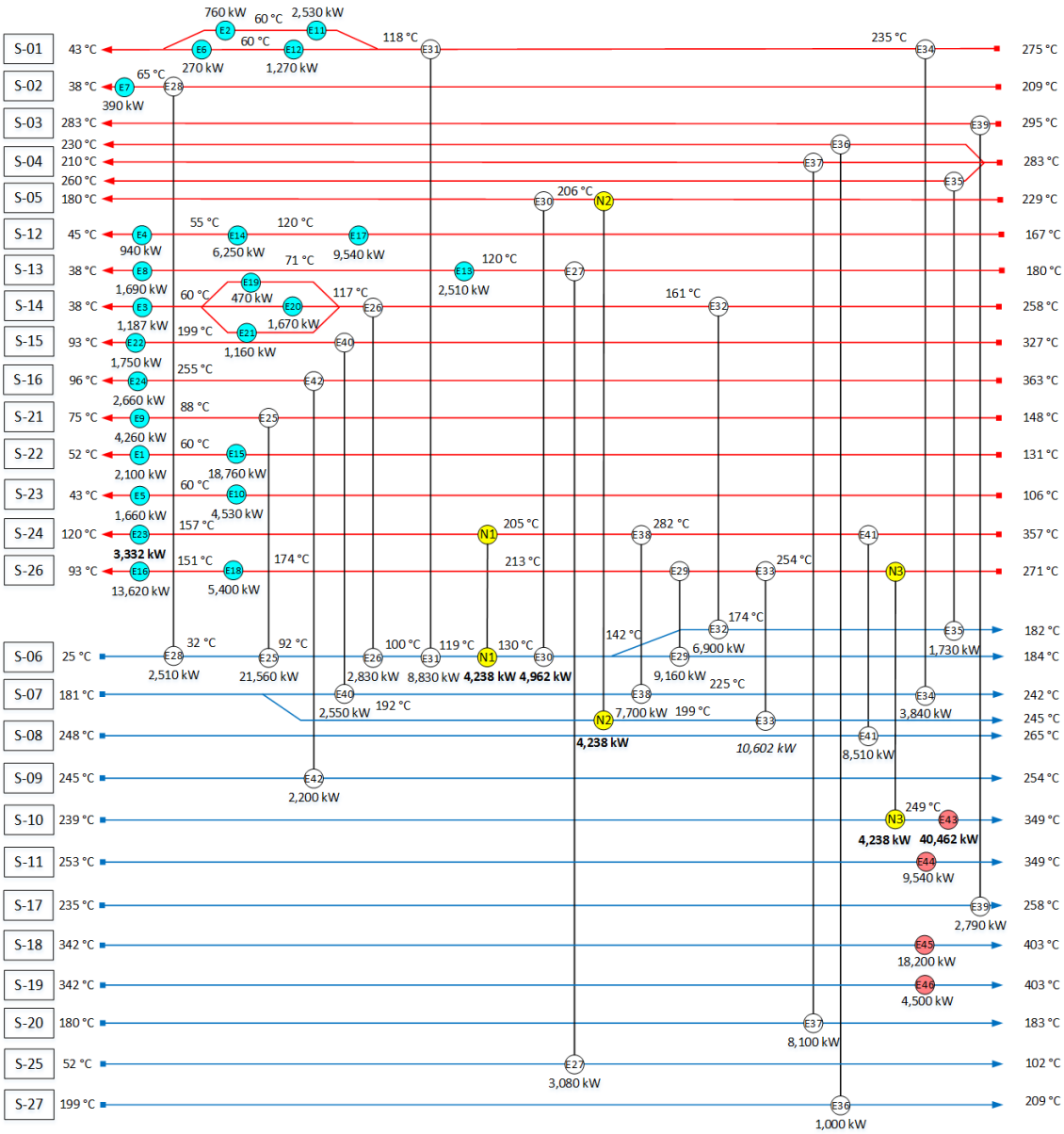

Figure 3: Heat Exchanger Network grid diagram representing the network after applying the Retrofit Bridge.

3.1.3 New Exergy Pinch Analysis Method for Sub-Ambient Processes

Sub-ambient processes such as a refrigeration system are a highly energy intensive area in chemical industries. Refrigeration systems require a high level of process cooling using a combination of compression and expansion operations. It is crucial to optimise heat transfer between the utility system and the process streams including the placement of compression and expansion operations to minimise the exergy losses and work as much as possible. Exergy Analysis is defined as a systematic tool to determine exergy content in the processes so that compressor shaft work can be analysed.

One of the key contributions in the area of Exergy Pinch Analysis is the ExPAnD method – Extended Pinch Analysis and Design – by Aspelund et al. [53]. Viewed through this lens, Professor Truls Gundersen and his team demonstrated how to utilise heating and cooling capacity by manipulating the pressure of streams to reduce net shaft work. Building on this foundation, Marmolejo-Correa and Gundersen [54] introduced a new parameter called as exergetic temperature to enable a linear graphical representation of improved exergetic Composite Curves. Their method for setting exergy targets used the principle of vertical heat transfer as viewed on typical Composite Curves. This created two problems: (1) the exergy targets were difficult to identify directly from the exergetic Composite Curves and (2) the exergy targets did not represent a true thermodynamic boundary.

Through a collaboration with Universiti Teknologi Malaysia, a series of work was undertaken to improve the basis for setting exergy targets with the contribution being captured by Article 3 in the Appendix[3]. In this capstone publication, new tools such as a set of Exergy Problem Tables and Exergetic Grand Composites are introduced. One of the fundamental differences between Article 3 and the approach of Marmolejo-Correa and Gundersen [54] was an assumption of horizontal heat transfer, which matches the conventional formulation of the Grand Composite Curve. A graphical example of the new Exergetic Grand Composite is presented in Figure 4. Application of this tool helped to determine exergy targets for rejection, requirement and avoidable losses.

[3] **Article 3:** Hamsani, M.N., Walmsley, T.G., Liew, P.Y., Wan Alwi, S.R., 2018. Combined Numerical Pinch and Exergy Analysis for Low Temperature Heat Exchanger Network. Energy, 153, 100-112. DOI: 10.1016/j.energy.2018.04.023

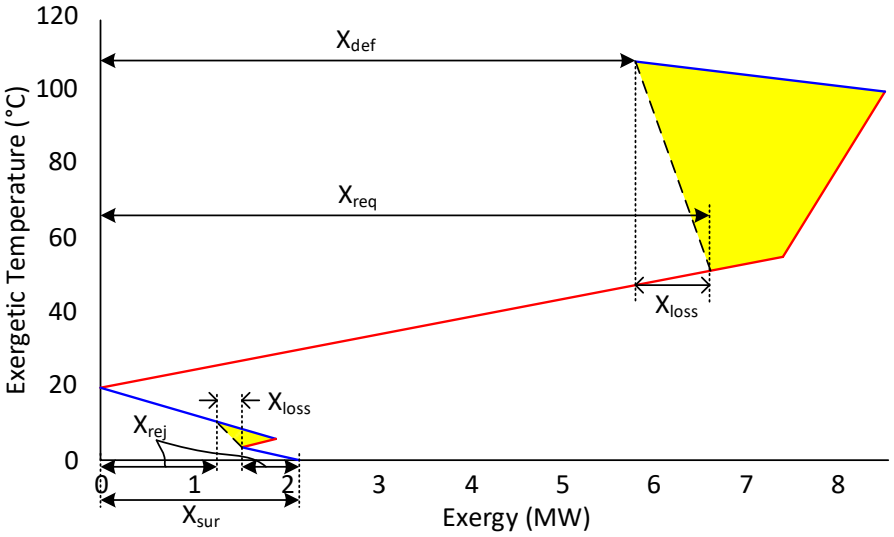

Figure 4: Exergy Grand Composite Curve (Ex-GCC) of the refrigeration system with minimum approach temperature of 10 ºC.

3.2 Case Studies

The majority of case study research on unit operations have centred on the production of milk powder from milk. Minimising the energy demands and overcoming barriers to implementation of energy efficiency projects are the focuses of the present section.

The conversion of raw milk into powdered milk is an energy-intensive process requiring steam heating, chilling and electrical utilities. The milk powder process has four main processing steps: milk separation, heat treatment, evaporation, and spray drying. Figure 5 presents an overview of a stand-alone milk powder factory. Over the past four decades, improved technologies have increased the energy efficiency of milk powder plants [55]. Additional savings may also be derived from emerging technologies [56]. Specific fuel consumptions have decreased from about 12,000 MJ_f/t_p of powder to between 5,000 – 6,000 MJ_f/t_p and specific electricity uses are in the order of 150 to 400 kWh/t_p (111 MJ_e/t_p) [57]. The absolute fuel and electricity use and split depend on the installed technology, degree of heat integration, scale of production, and utility system efficiency.

In the following three sections, specific energy efficiency projects for individual milk powder production processes are described. In addition, experimental and numerical fouling studies are presented that addresses the significant issue of milk powder particulate fouling – a key barrier to the implementation of spray dryer exhaust heat recovery.

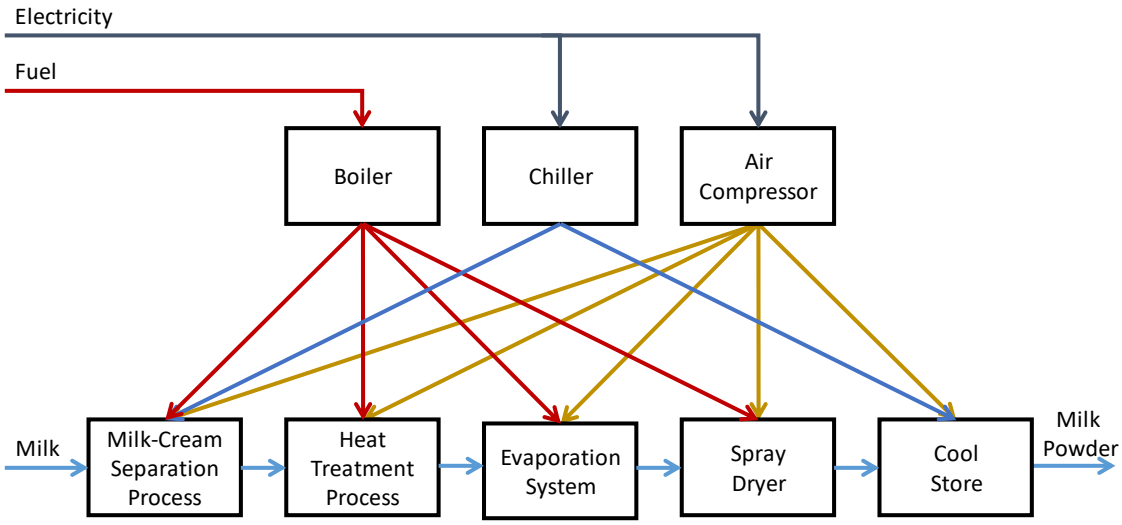

Figure 5: Modern stand-alone milk powder factory overview.

3.2.1 Unit Operation Energy Integration and Optimisation in Milk Evaporation Systems

Thermal and mechanical vapour recompression technologies find excellent application in a wide range of evaporation and distillation systems. Thermal Vapour Recompression – TVR uses a thermocompressor with high-pressure vapour (steam utility) to recompress low-pressure vapour (often under vacuum) to a slightly higher pressure and temperature. Mechanical Vapour Recompression – MVR uses a mechanical fan, normally driven by electricity, to recompress low-pressure vapour to a slightly higher pressure and temperature. In distillation systems, MRV can directly compress top distillate vapour for use in the reboiler or can indirectly recovery heat from the distillate vapour using a separate working fluid such as n-pentane before the upgrade and use in the reboiler. These processing structures led to a step-change in energy integration [58]. In desalination systems, multi-effect evaporation systems integrated with an absorption heat pump and vapour compression cycles can effectively synthesize to generate cooling and fresh clean water at 26% lower total cost compared to [59]. TVR has found application in carbon capture processes to upgrade and recovery of waste, resulting in energy savings between 10 – 14 % [60].

In milk evaporation systems, vapour recompression units directly compress vapour flows drawn from the product on the tube-side ("evaporator") to a higher pressure and temperature for use as the condensing vapour on the shell-side ("condenser"). As a result, this arrangement creates a so-called open cycle heat pump. The analogy between vapour recompression and conventional heat pumps also extends to the idea of appropriate placement in Pinch Analysis, which states that a heat pump should upgrade heat from below the Pinch for use above the Pinch [61]. Purposeful design and

integration of the evaporation system to complement the heat demands of neighbouring processes provide greater opportunities for energy and emissions savings.

This series of contributions to literature focused on applying Pinch Analysis to an industrial milk evaporator case study to quantify the potential energy savings by implementing the appropriate placements of vapour recompression technologies. The publication representative of this area is Article 4 in the Appendix[4]. A detailed heat and mass balance process model of a multi-effect falling film milk evaporator system, including both MVR and/or TVR options, was implemented in an Excel™ spreadsheet. The model was validated for a current industrial set-up using plant data. The Grand Composite Curve played a critical role in identifying areas for process modifications and placement of vapour recompression that results in energy reduction. After the development of a design concept, it was replicated in the Excel model to derive a new set of stream data. With several iterations between modelling and Pinch Analysis, a new final design required 78 % less steam (6,397 kW) at the expense of 16 % (364 kW_{ele}) more electricity use. The estimated cost savings associated with the improved design was 942,600 NZD/y (14,200,000 CZK) and the emissions reduction was 3,416 t CO_2-e/y.

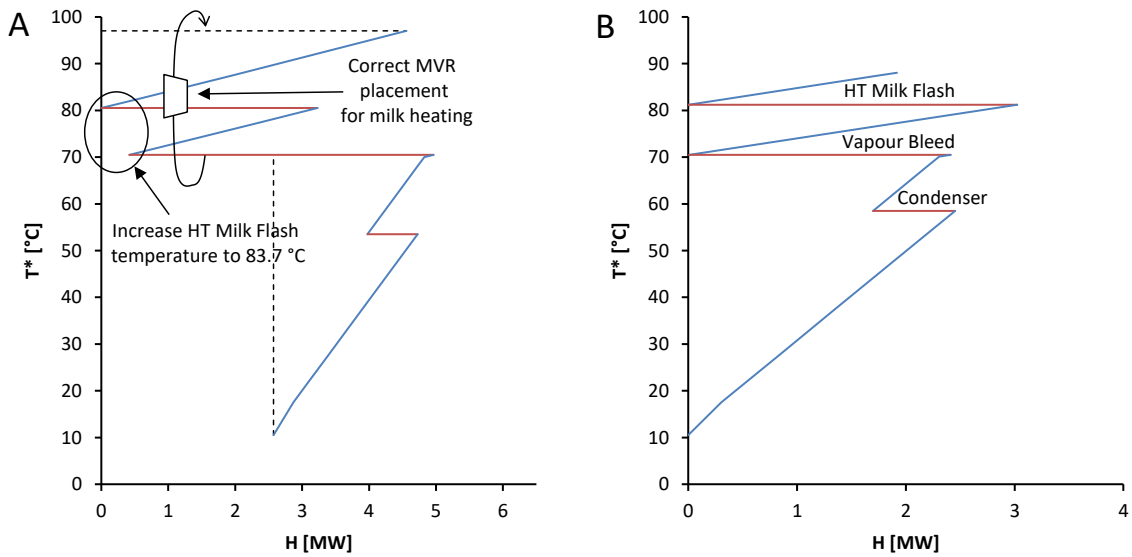

Figure 6: Development of an evaporation system design using the Grand Composite Curve, given Effects 1 and 2 are both integrated with MVR. (A) Identification of potential energy savings. (B) Final GCC for new MVR/MVR evaporation system design.

[4] **Article 4:** Walmsley, T.G., Atkins, M.J., Walmsley, M.R.W., Neale, J.R., 2016. Appropriate placement of vapour recompression in ultra-low energy industrial milk evaporation systems using Pinch Analysis. Energy 116, Part 2, 1269–1281. DOI: 10.1016/j.energy.2016.04.026

3.2.2 Integration and Optimisation of Milk Spray Dryers

Spray dryer exhaust heat recovery can typically increase dryer energy efficiency by 10 – 20 % [62], but it is complicated by the low heat transfer coefficient of air and the presence of powder particulates that may foul the heat exchanger surfaces. Increasing energy efficiency in milk spray drying is an important topic for New Zealand because the results of the New Zealand dairy industry heavily impacts the national economy. The installed capacity of milk spray drying in New Zealand reached an estimate of 300 t/h in 2013 with a consumption of around 29 PJ/y of thermal energy. Milk powders supply about 20 % of New Zealand's exports.

The New Zealand dairy industry has been cautious to uptake spray dryer exhaust heat recovery. In the mid-1980's, the Plains Co-Op Dairy Ltd factory installed a glass tube air-to-air exhaust heat recovery system. However, energy surveys of its performance showed that heat recovery levels decreased by as much 40 % after 13 h of operation due to milk powder fouling. In 2008, a New Zealand South Island dairy factory built a new state-of-the-art dryer, which was also the world's largest milk dryer at the time and had plans to install a liquid coupled loop exhaust heat recovery system. The exhaust heat exchanger was built but never installed due to concerns over milk powder fouling causing disruptions to plant production. Since that time an additional more than twelve milk powder spray dryers have been built in New Zealand all without exhaust heat recovery, which evidences that exhaust heat recovery is not standard industry practice in New Zealand.

This contribution[5] to literature reported a thermo-economic design optimisation of an industrial milk spray dryer liquid coupled loop exhaust heat recovery system. Incorporated into the analysis is the ability to predict the level of milk powder fouling over time and its impacts on heat transfer and pressure drop. The numerical predictions were based on the model from Article 12, which was formulated from experimental fouling tests. For the dryer exhaust heat exchangers, the compact heat exchanger design applied finned round tube, bare round tube and bare elliptical tube. Modelling results showed that spray exhaust heat recovery is economically viable for the considered industrial case study. The best liquid coupled loop heat exchange system required a finned tube heat exchanger to recover heat from the exhaust air with a face velocity of 4

[5] **Article 5:** Walmsley, T.G., Walmsley, M.R.W., Atkins, M.J., Neale, J.R., Tarighaleslami, A.H., 2015. Thermo-economic optimisation of industrial milk spray dryer exhaust to inlet air heat recovery. Energy 90, Part 1, 95–104. DOI: 10.1016/j.energy.2015.03.102

m/s and 14 tube rows, which gives a net present value of 2,900,000 NZD (43,500,000 CZK) and an internal rate of return of 71 %.

Since the publication of the study, the author led efforts to implement a pilot dryer exhaust heat recovery unit, which is presented in Figure 7.

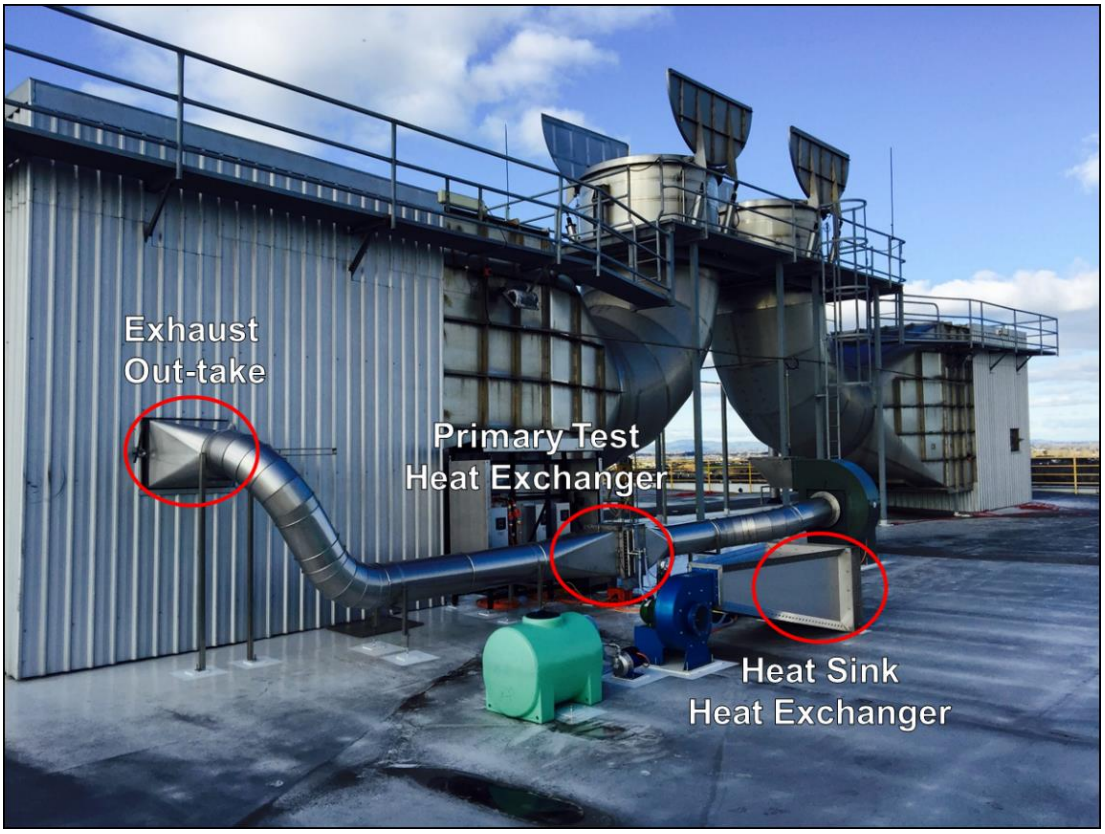

Figure 7: Implemented pilot-scale exhaust heat recovery unit with a liquid coupled loop at a factory near Hamilton, New Zealand.

In addition, further research has simulated and optimised a hybrid compression-absorption heat pump process for convective dryers considering Pinch design principles. With a greening electricity grid, heat pumps represent an effective technology to reduce process heat emissions. As a result, numerous types of heat pumps integrated with convective dryers have been reported in the literature, but no study was found to use a hybrid heat pump. To simplify the design and optimisation, Process Integration principles for compressors and expanders from the literature were synthesised into a Pinch Design Method for heat pumps as illustrated in Figure 8. A milk spray dryer case study is analysed. Simulation results using Petro-Sim^{TM} showed that the optimally design hybrid heat pump system can reduce dryer energy demand by 47.3 % and total emissions by 42.4 % (assuming a low carbon electricity grid) while achieving a gross Coefficient of Performance of 4.53.

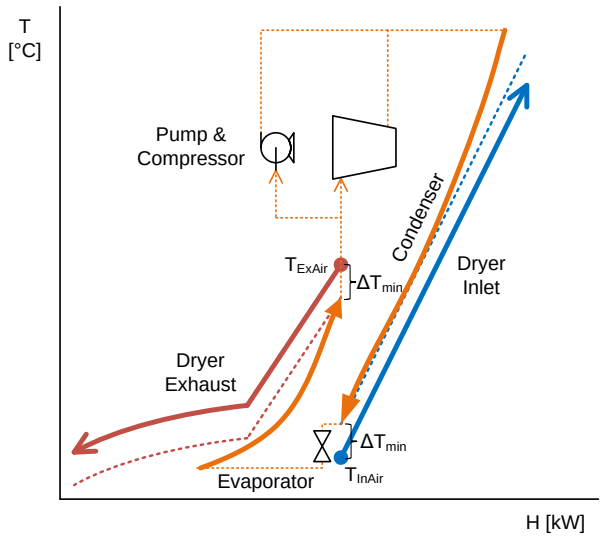

Figure 8: Pinch design of a hybrid heat pump cycle and its components integrated with a dryer exhaust and inlet air streams.

3.2.3 Fouling on Milk Dryer Exhaust Heat Transfer Surfaces

A significant challenge associated with the recovery of waste heat from milk dryer exhaust gases is, the air contains a small amount of powder that may deposit on the face and surfaces of a heat exchanger. The following three articles presented experimental and numerical research targeted at addressing this specific challenge. The purpose of this series of experimental and numerical work was to comprehensively quantify the issue of heat exchanger fouling for milk spray dryer exhaust heat exchangers.

Predicting the deposition during the production of milk powder was identified as a possible avenue for creating new designs and selecting processing conditions that minimise particle deposition for dryer exhaust heat exchangers. Numerous studies had looked at characterising various aspects of milk powder deposition, agglomeration and caking. However, the literature lacked a fundamental and validated criterion that describes the deposition of milk powder particle impacts with short contact times (<1 s).

In this first contribution[6] focused on milk powder deposition, standard solutions to the contact mechanics problem of a spherical elastic particle with an adhesive surface impacting a rigid plate at normal and oblique angles formed the basis to derive a semi-empirical criterion that described whether a particle sticks after impacting a wall. To validate the criterion, the determining factors of skim milk powder deposition, which are air temperature, water activity (i.e. relative humidity), plate (or wall) temperature, and particle size, velocity and impact angle, were isolated and experimentally tested using

[6] **Article 6:** Walmsley, T.G., Walmsley, M.R.W., Atkins, M.J., Neale, J.R., Sellers, C.M., 2014. An experimentally validated criterion for skim milk powder deposition on stainless steel surfaces. Journal of Food Engineering 127, 111–119. DOI: 10.1016/j.jfoodeng.2013.11.025

an impingement jet test. Figure 9 shows the collation of experimental test as applied to validate the semi-empirical model.

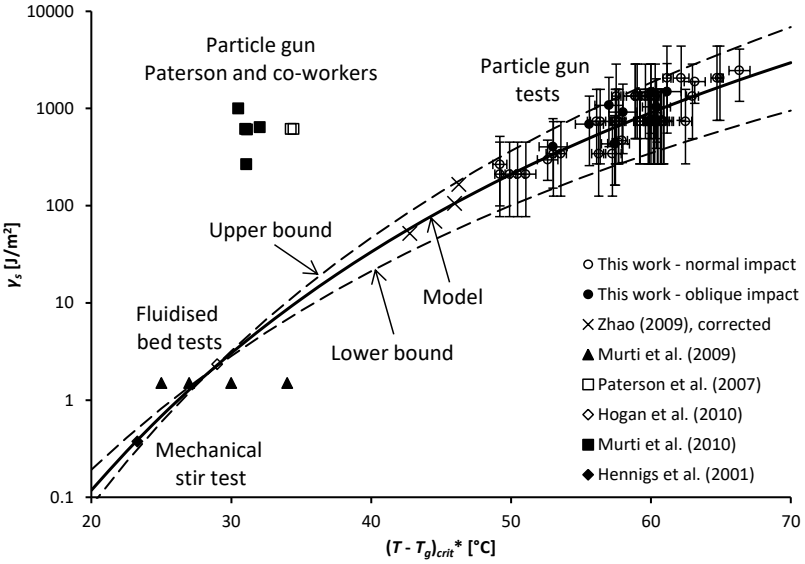

Figure 9: Combined effect of particle size, impact angle and velocity on deposition.

A second paper in the area [63] reported fouling and pressure drop analysis of milk powder deposition on the front of parallel fins. The work introduced a novel lab-based test that simulated powder deposition on a bank of parallel plate fins at spray dryer exhaust air conditions. The fin bank acted like the face of a typical finned tube row in an exhaust recuperator. The design of the testing apparatus is presented in Figure 10. The aim of this study was to look at how deposition on the front of fins may be affected by the air conditions. Results showed similar characteristics to other milk powder deposition studies that exhibit a dramatic rate increase once critical stickiness levels are reached. As powder deposited on the face of the fins, the pressure drop across the bank increased until an asymptote occurs, indicating that the rates of deposition and removal had become similar. For very sticky conditions, deposition on the face of the fins caused a rise in the pressure drop by 65 %. The pressure drop was successfully related to the percentage of the open frontal area of the fins with and without deposition.

The final paper in this area, also presented in the Appendix[7], aimed to characterize the deposition of skim milk powder on a single bare tube in cross-flow, as shown in Figure 11. Extending the application of the experimental test rig in Figure 10, in this work the apparatus was applied to tubes in cross-flow under air conditions similar to that of an industrial spray dryer. For a constant airflow rate, increasing particle stickiness resulted

[7] **Article 7:** Walmsley, T.G., Walmsley, M.R.W., Atkins, M.J., Neale, J.R., 2015. Analysis of skim milk powder deposition on stainless steel tubes in cross-flow. Applied Thermal Engineering 75, 941–949. DOI: 10.1016/j.applthermaleng.2014.10.066

in greater deposition coverage around the front of the round and elliptical tubes peaking in the middle, whereas the turned square tube tended to be either clear or covered. Results showed that the skim milk powder particle impact angle on the tube, as opposed to the wall shear stress, was the determinant factor of deposition.

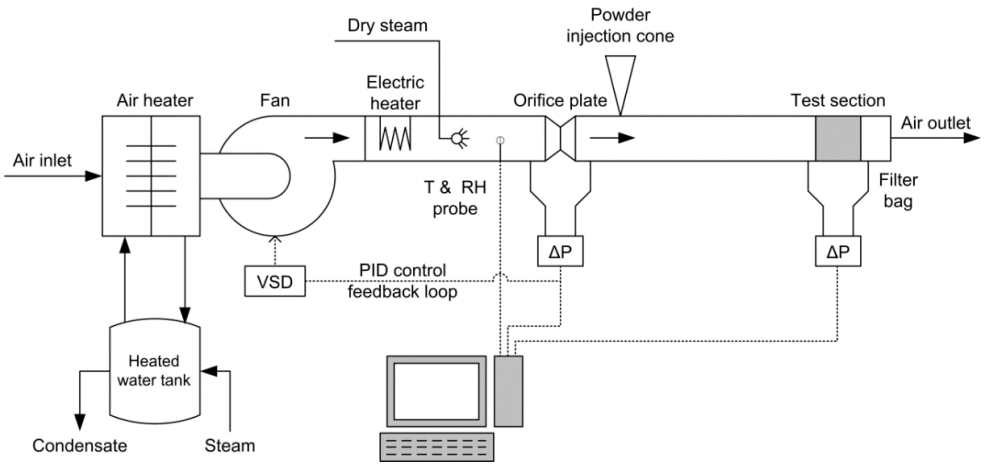

Figure 10: Deposition test rig schematic.

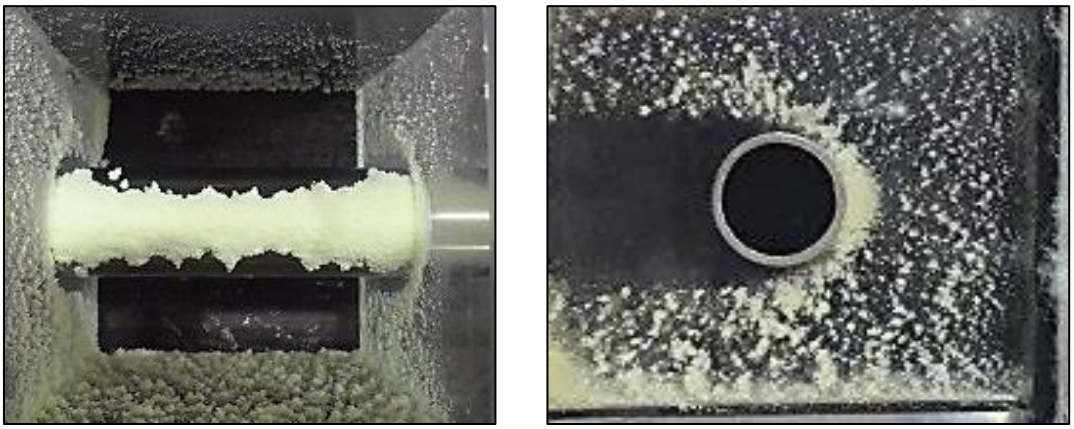

(a) Front and side views of deposition on a circular tube.

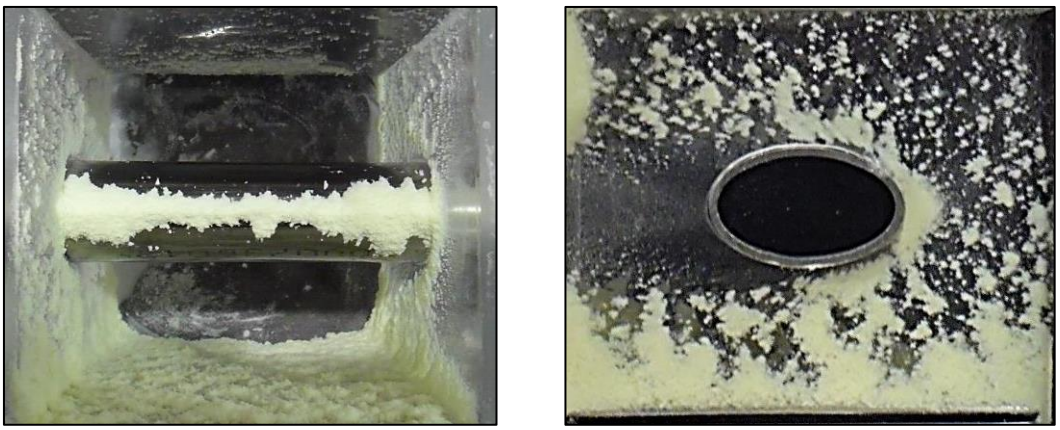

(b) Front and side views of deposition on an elliptical tube.

Figure 11: A comparison between fouling on (a) a circular tube compared to (b) an elliptical tube.

CHAPTER 4

TOTAL SITE INTEGRATION

4.1 Novel and Innovative Methods

Between 20 % and 50 % of world energy consumption is lost as waste heat through energy conversion and transportation in manufacturing processes. Within industrial Total Sites and Locally Integrated Energy Systems, there is much opportunity to recover, upgrade and re-integrate heat that is currently rejected. The following articles focused on developing novel methods to improve TSHI couple with a demonstration through appropriate case studies.

4.1.1 Total Site Heat Integration Concepts for Waste Heat Recovery

This first line of research centred on the recovery of wasted heat, i.e. heat below the Pinch that is normally rejected to the environment. The first contribution[8] was a collaborative effort with the Universiti Teknologi Malaysia and Pázmány Péter Catholic University and is presented as Article 8 in the Appendix. This contribution presented a new Total Site Heat Integration concept that integrates heat, power, and cooling. The waste heat technology considered for cooling generation were Absorption Chiller and Electric Compression Chiller as shown in Figure 12.

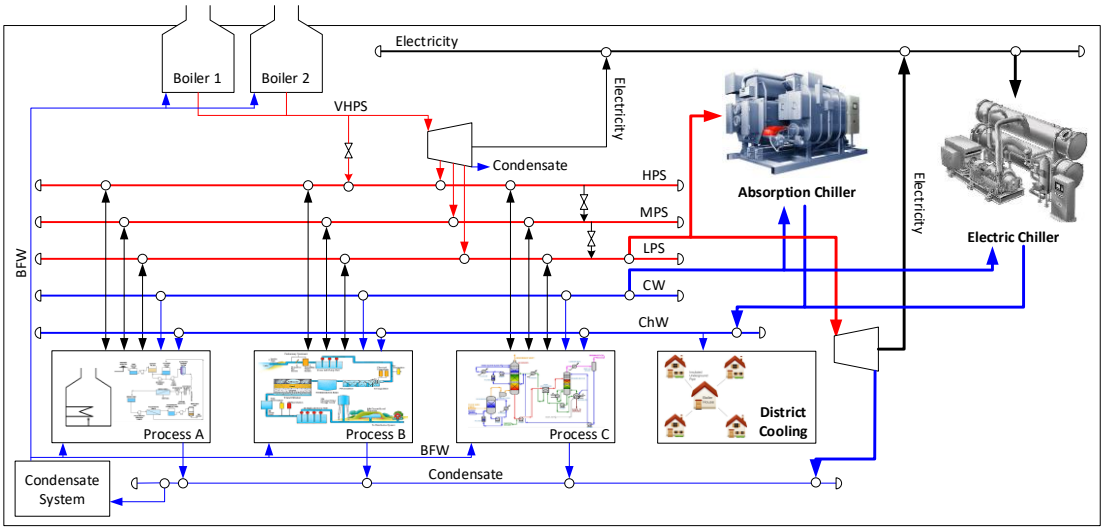

Figure 12: A Total Site with an integrated centralised cooling system.

[8] **Article 8:** Liew, P.Y., Walmsley, T.G., Wan Alwi, S.R., Abdul Manan, Z., Klemeš, J.J., Varbanov, P.S., 2016. Integrating district cooling systems in Locally Integrated Energy Sectors through Total Site Heat Integration. Applied Energy 184, 1350–1363. DOI: 10.1016/j.apenergy.2016.05.078

As there is an economic trade-off between amounts of chilled water generated, cooling water and power consumed, the new framework proposed to guide users in selecting the most economical waste heat-to-cooling technology for Total Sites. For the presented case study, the lowest-cost solution used a waste-heat driven Absorption Chiller supplying 4.0 MW of Chilled Water and a supplementary Electric Chiller supplying the remaining 1.0 MW. Under the integrated scheme, Chilled Water was generated at 115.10 USD/kWy (2,370 CZK/kWy) compared to 270.9 USD/kWy (5,580 CZK/kWy) for generating Chilled Water by a conventional Electric Chiller system without waste heat recovery.

The second contribution to this area [64] introduced an effective Total Site targeting methodology to integrate open cycle heat pump systems, i.e. vapour compression technologies, into an integrated industrial energy system for enhancing overall site energy efficiency as illustrated in Figure 13. Vapour compression systems upgrade low-grade waste heat by supplying a low quantity of high-pressure steam or mechanical work (mechanical-compressor) to generate higher pressure steam, as is common with evaporation systems.

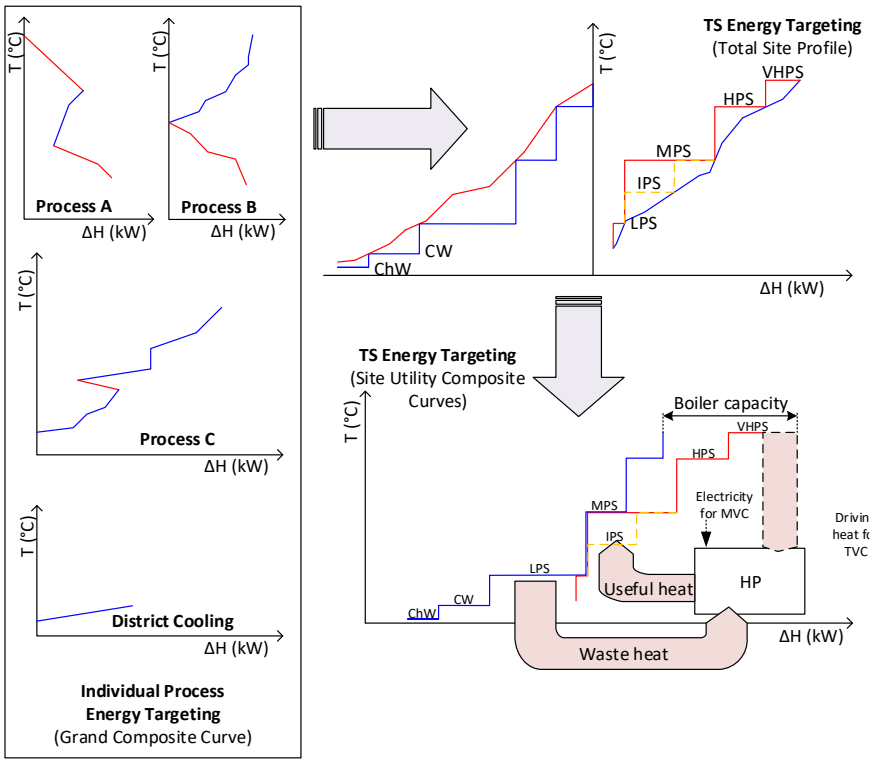

Figure 13: Method for a feasibility study of open loop heat pump integration into the Total Site steam utility system.

Industrial waste heat and high-quality steam demand were simultaneously reduced through open cycle heat pump integration. The energy reduction and cost-benefit of

thermo-compressor and mechanical-compressor installations were compared through a literature case study. The case study showed a deficit of heat at the Medium-Pressure Steam level and a surplus of heat the Low-Pressure Steam level, which was identified as a candidate for compression according to the appropriate placement principle for heat pumps. For the case study, a four-stage mechanical vapour compression system and two-stage thermal vapour compression system resulted in energy cost reductions of 343,900 USD/y (7,086,000 CZK/y) and 168,829 USD/y (3,479,000 CZK/y).

A final contribution in this area [65] presented a new method for calculating assisted heat transfer and shaft work targets for an example TS problem. Analysis results showed that assisted heat transfer increases TSHI only when a process heat recovery pocket spans the Total Site Pinch Region. The maximum assisted TSHI can be targeted by comparing each heat recovery pocket to the Site Utility Grand Composite Curve using background/foreground analysis as illustrated in Figure 14.

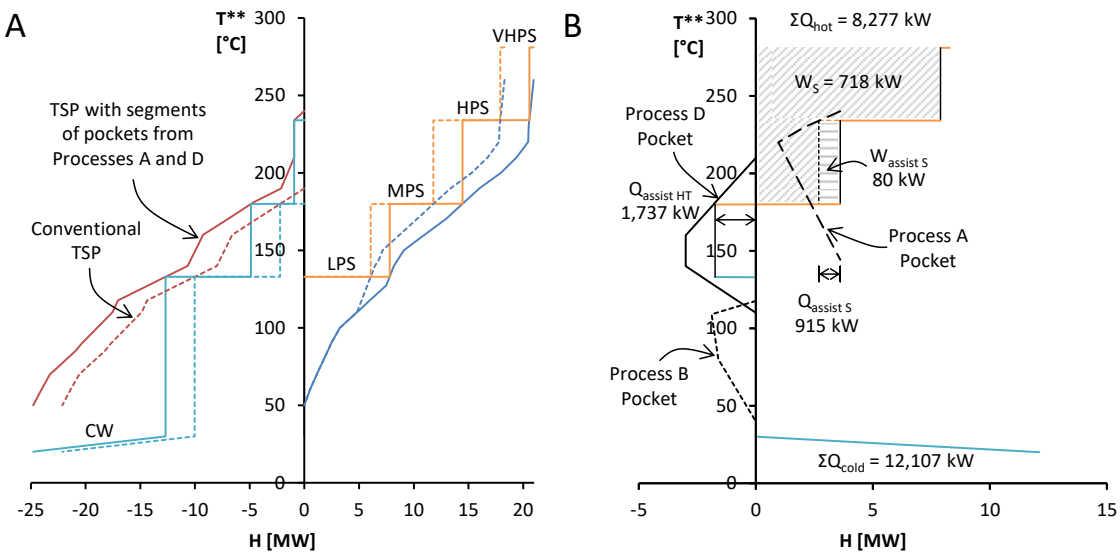

Figure 14: (A) New Total Site Profiles including assisting segments of pockets from Process A and D compared to the conventional method. (B) Targets for assisted heat transfer and shaft work using the Site Utility Grand Composite Curve and the Grand Composite Curve pockets from Process A, B, and D.

Where heat recovery pockets span two steam pressure levels away from the TS Pinch Region (usually above), the example showed the potential for assisted shaft work production. In this case, the source segment of the heat recovery pocket generates steam (e.g. MPS), which replaces steam that would otherwise have been extracted from a steam turbine. The sink segment of the heat recovery pocket consumes lower pressure steam (e.g. LPS), which is extracted from the turbine. If a heat recovery pocket falls outside these two situations, the entire pocket should be recovered internally to a process.

4.1.2 A Total Site Heat Integration Design Method for Integrated Evaporation Systems Including Vapour Recompression

Evaporation systems are commonly needed to concentrate multi-component liquid solutions, suspensions, and emulsions in the food and dairy, pulp and paper, petrochemical, chemical, and pharmaceutical industries. Evaporation systems normally achieve high levels of energy recovery by optimally cascading heat using various multi-effect arrangements [66] as well as heat integration of evaporation/condensation loads with the heating and cooling needs of other processes [67]. Integration of evaporation systems with vapour recompression technologies is a different approach for attaining high levels of energy efficiency, without increasing the number effects. The concept of vapour recompression in evaporation systems is to upgrade low-pressure vapour from an effect's evaporation-side to a higher temperature and pressure for re-injection on the condensation-side of the same or another effect. Mechanical Vapour Recompression (MVR) uses a blower to lift the pressure and temperature of a vapour flow. Thermal Vapour Recompression (TVR) uses a thermo-compressor in conjunction with steam injection for vapour recompression. Of the two techniques, an MVR blower requires higher capital investment, but can greatly reduce the number of effects and lower overall energy use and operational cost [68].

Carrying on from the developments in evaporation system integration for individual unit operations, the contribution in this area[9] introduced a new Total Site Heat Integration (TSHI) method, Figure 15, for the design of integrated evaporation systems including vapour recompression that minimises energy use and/or cost objective functions. The design of integrated evaporation systems is a common industrial chemical and process engineering problem. The method defined a new hybrid Total Site Profile (TSP) as a key element of the new design method. This profile forms a composite of nearby streams that may directly integrate with the evaporation system as well as stream segments from processes that require indirect integration via the utility system. The hybrid TSP played an important role in the iterative optimisation of evaporation system design parameters including vapour recompression and evaporation load distribution to optimise objective functions such as total cost, total operating cost, and heat recovery. The new TSHI design method for evaporation systems was demonstrated using an industrial milk processing case study.

[9] **Article 9:** Walmsley, T.G., 2016. A Total Site Heat Integration design method for integrated evaporation systems including vapour recompression. Journal of Cleaner Production 136, Part B, 111–118. DOI: 10.1016/j.jclepro.2016.06.044

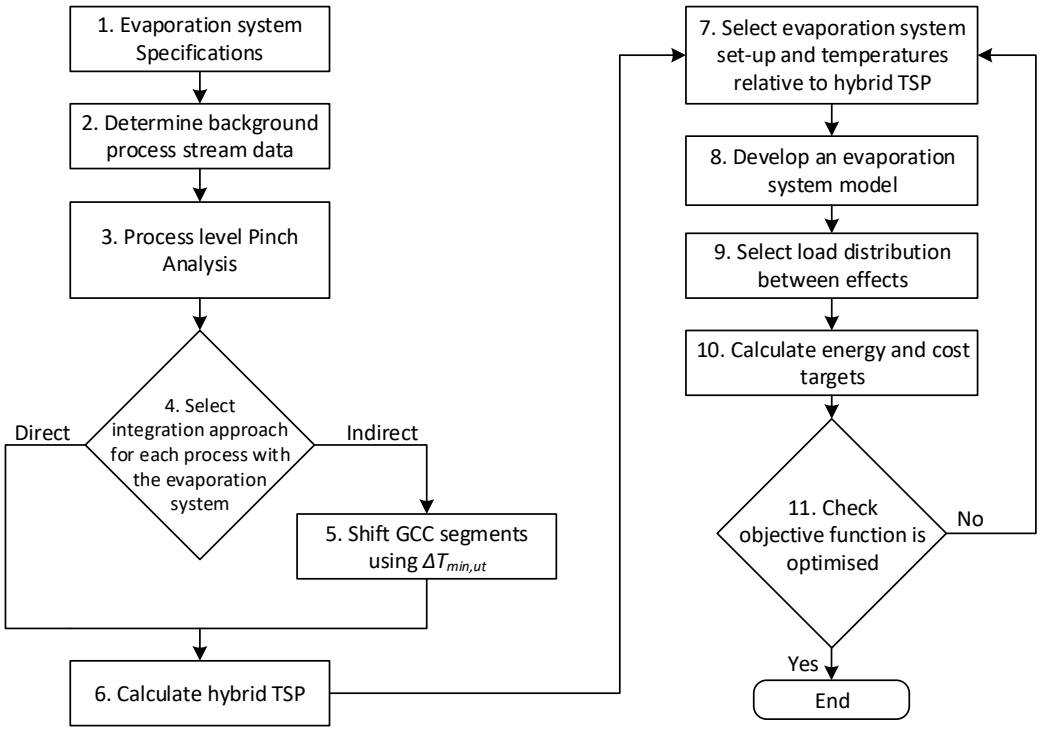

Figure 15: Integrated evaporation system including vapour recompression design and optimisation method.

4.1.3 Unified Total Site Heat Integration

Effectively applying TSHI techniques to processing applications and sites that required non-isothermal utilities is complex and economically challenging. The use of a Heat Recovery Loop (HRL) for site-wide heat integration of low-temperature processes was investigated by Atkins et al. [69] and later formalised into a comprehensive method by Walmsley et al. [70]. In their work detailed targeting and design considerations for HRLs have included: thermal storage management [71], storage temperature selection [72], storage capacity [73], heat exchanger area sizing method [74] and performance [75], the integration of industrial solar [76], and the effect of using a nanofluid as the intermediate fluid on heat recovery [77]. Lastly, Chang et al. [78] presented the use of MINLP model with economic objectives to optimise HRLs.

TSHI methodologies are baseline feasibility studies for maximum energy recovery via heat exchanger and utility network. However, there are no network constraints (besides thermodynamics) in conventional TSHI for heat exchanger matches between process and utility streams. This problem was recently recognised by Sun et al. [30]. As the boiler feed water (non-isothermal utility) pinched against the TSP, they recognised that the heat may need to be transferred from multiple processes and that the network, although thermodynamically feasible, might be too complex in practice [30]. Conventional TSHI allows process-utility heat exchanger matches in series from any process for the utility

to reach its target temperature and then returned to the central utility system. As a result, conventional TSHI targets for non-isothermal utilities can be overly optimistic. The HRL method, on the other hand, predefines the network structure by having all HRL heat exchangers in parallel to one another (even within a process). Such a tight constraint for the network lowers the inter-plant heat recovery target and often overlooks opportunities to increase energy efficiency [69]. The gap in the literature was, therefore, the lack of an appropriate TSHI method that realistically targets both isothermal and non-isothermal utility consumption.

The following series of work encompassed developed a new Unified Total Site Heat Integration method. These articles comprise the core chapters of a PhD thesis by Mr Amir Tarighaleslami, who recently defended his PhD thesis.

The first of these articles, which is presented in the Appendix[10], developed a new TSHI targeting methodology (Figure 16) that calculated improved TSHI targets for sites that require isothermal (e.g. steam) and non-isothermal (e.g. hot water) utilities. The new method cumulated process level utility targets to form the basis of Total Site utility targets; whereas the conventional method uses Total Site Profiles based excess process heat deficits/surpluses to set Total Site targets. Using an improved targeting algorithm, the new method required a utility to be supplied to and returned from each process at specified temperatures, which is critical when targeting non-isothermal utilities such as hot water. Such a constraint was not inherent in the conventional method. The subtle changes in procedure from the conventional method meant TSHI targets were generally lower but more realistic to achieve. Three industrial case studies representing a wide variety of processing industries were targeted using the conventional and new TSHI methods, from which key learnings were underscored.

A follow-up paper then presented a new Total Site Heat Integration utility temperature selection and optimisation method that optimised both non-isothermal (e.g. hot water) and isothermal (e.g. steam) utilities. Very few existing methods at the time addressed both non-isothermal and isothermal utility selection and optimisation incorporated in a single procedure. The optimisation affected heat recovery, the number of heat exchangers in Total Site Heat Exchanger Network, heat transfer area, exergy destruction, Utility Cost, Annualised Capital Cost, and Total Annualised Cost. Three optimisation parameters, Utility Cost, exergy destruction, and Total Annualised Cost were incorporated into a derivative based optimisation procedure where derivatives may be

[10] **Article 10:** Tarighaleslami, A.H., Walmsley, T.G., Atkins, M.J., Walmsley, M.R.W., Liew, P.Y., Neale, J.R., 2017. A Unified Total Site Heat Integration targeting method for isothermal and non-isothermal utilities. Energy 119, 10–25. DOI: 10.1016/j.energy.2016.12.071

minimised sequentially and iteratively based on the specified approach. The new optimisation procedure was applied using three different approaches. The merits of the new method were illustrated using same three case studies as Article 14. Results for the case studies suggested the best derivative optimisation approach is to first optimise Utility Cost in combination with exergy destruction and then to optimise Total Annualised Cost. For this approach, Total Annualised Cost reductions between 0.6 and 4.6 % for different case studies and scenarios were achieved.

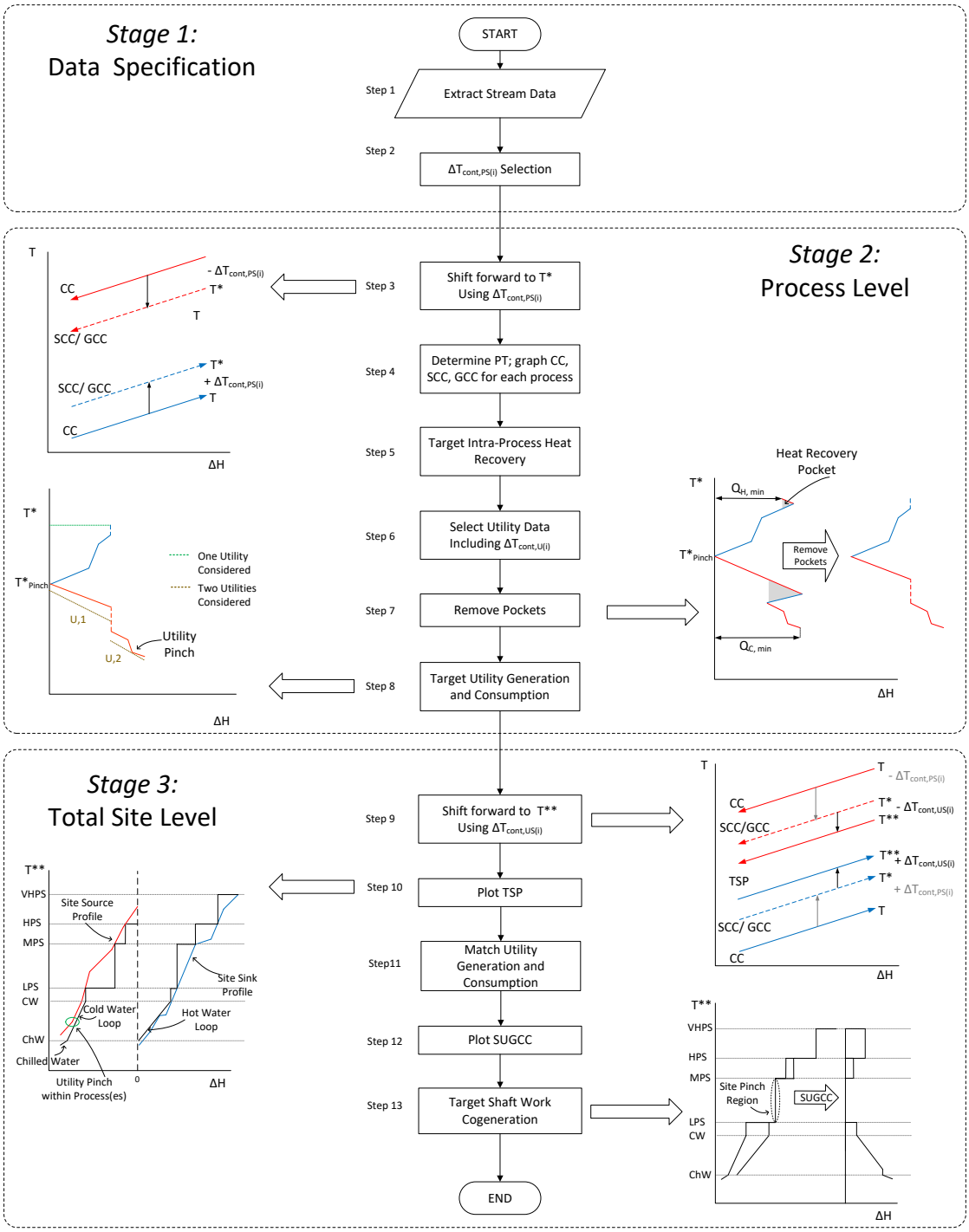

Figure 16: Unified Total Site Targeting (UTST) procedure.

The final segment of the series from Mr Tarighaleslami's PhD thesis focused on Utility Exchanger Network Synthesis for Total Site Heat Integration. Although Total Site Heat Integration (TSHI) targeting and optimisation methods have been well developed, few studies had dealt with detailed Utility Exchanger Network design. The Utility Exchanger Network, Figure 17, is the network of heat exchangers that connect a site's centralised utility system to each process while also facilitating inter-process heat recovery. This paper presented a new Utility Exchanger Network design procedure based on the recently developed Unified TSHI targeting method. In the new Utility Exchanger Network design procedure, calculated utility targets from the unified targeting method were achieved after Utility Exchanger Network design and the number of exchangers reduced compared to the design procedure based on the conventional method. are achieved after UEN design based on both design procedures.

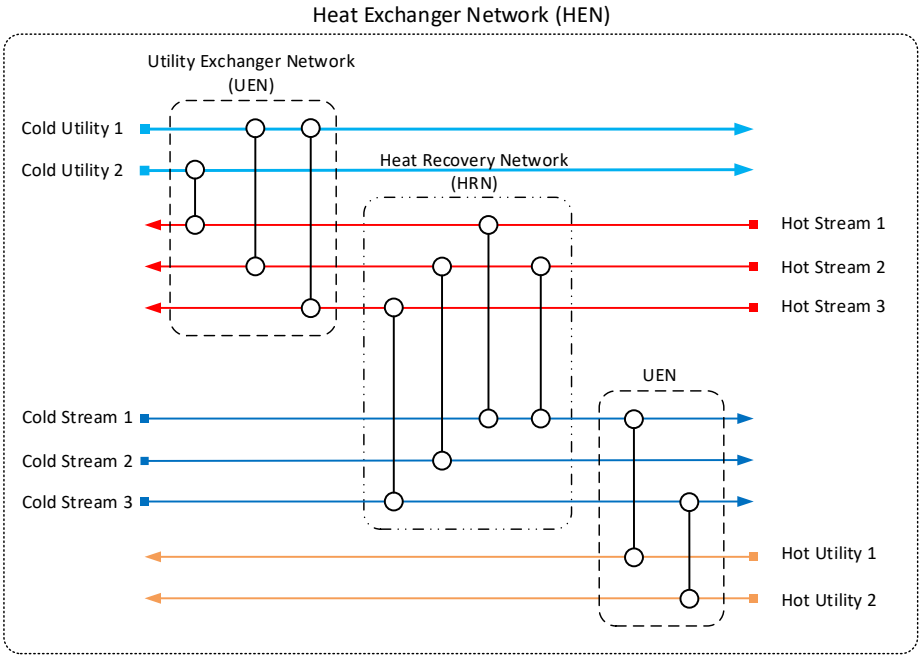

Figure 17: A schematic of HEN containing HRN (process-process matches) and UEN (utility-process matches).

4.1.4 Total Site Mass, Heat and Power Integration Using Process Integration and Process Graph

Total Site problems with simultaneous mass, heat, and power integration, i.e. Total Site Mass, Heat and Power Integration (TSMHPI), as shown in Figure 18, has received significantly less attention even though this has been viewed as an area of rich potential for a new generation of mega processing sites. Duran and Grossmann [79] proposed a simultaneous solution for optimal heat integration while optimising the process flow sheet by approximating the non-differentiable optimisation problem and concluded that

simultaneous approach is more efficient than the sequential approach in heat integration. Maréchal and Kalitventzeff [80] reported that a variation in process stream properties, production level and product grade lead to different design and operation of the heat exchanger network due to the different possible heat recovery. Simultaneous process synthesis and process integration should be considered when synthesising an industrial cluster. Gassner and Maréchal [81] presented a superstructure model to produce SNG from woody biomass with sequential mass and energy balance and process integration for optimal materials and utility recovery. Baliban et al. [82] presented simultaneous process synthesis and power integration in thermochemical coal, biomass and natural gas to liquids facility. The negative side of this approach is the complex mathematical models are more computationally intensive and require more detailed process data. Ng et al. [83] proposed an approach to simultaneously select the optimum process technologies and production with heat and power integration. Modular optimisation approach was used to break down the complex problem into small models. Kong and Shah [84] proposed an optimisation model to simultaneously screen for reaction pathways, separation and product separation with heat integration. The proposed method is solved with MILP and improved heat recovery is reported by including the screening of different separation methods. For a biorefinery example, biomass processing is challenging to model. One of the challenges is, biomass processing presents numerous alternative processing routes. By including PI in the pre-selection stage, it introduces an additional layer of combinatorial complexity.

This contribution[11] aimed to develop a novel method to visualise and solve Total Site Mass, Heat and Power Integration problem using a combination of Process Integration and P-graph techniques. The new method incorporated three important process engineering tools: (1) process modelling of mass and energy balance, (2) Pinch Analysis of individual processes and Total Site Heat Integration of clusters of related processes, and (3) the construction of a Total Site superstructure within the P-graph framework to represent the possible mass, heat, and power interconnections between process and utility systems.

To demonstrate the method, a biorefinery case study was investigated. The basis for the biorefinery was a Kraft pulp mill in combination with three potential biorefinery processes, combined heat and power, and geothermal steam. The three considered new processes are gasification for dimethyl-ether production, simultaneous scarification and co-

[11] **Article 11:** Ong, B.H.Y., Walmsley, T.G., Atkins, M.J., Walmsley, M.R.W., 2017. Total site mass, heat and power integration using process integration and process graph. Journal of Cleaner Production 167, 32–43. DOI: 10.1016/j.jclepro.2017.08.035

fermentation of pine for ethanol production, and hydrothermal liquefaction for bio-oil production. Results from the case study show the current optimal solution as a Kraft mill with geothermal heat achieving a profit (revenue less energy and capital costs) of 283 million NZD/y (4,245 million CZK/y). A near-optimal solution has hydrothermal liquefaction added to the Kraft mill with geothermal heat with a profit of 252 million NZD/y (3,780 million CZK/y).

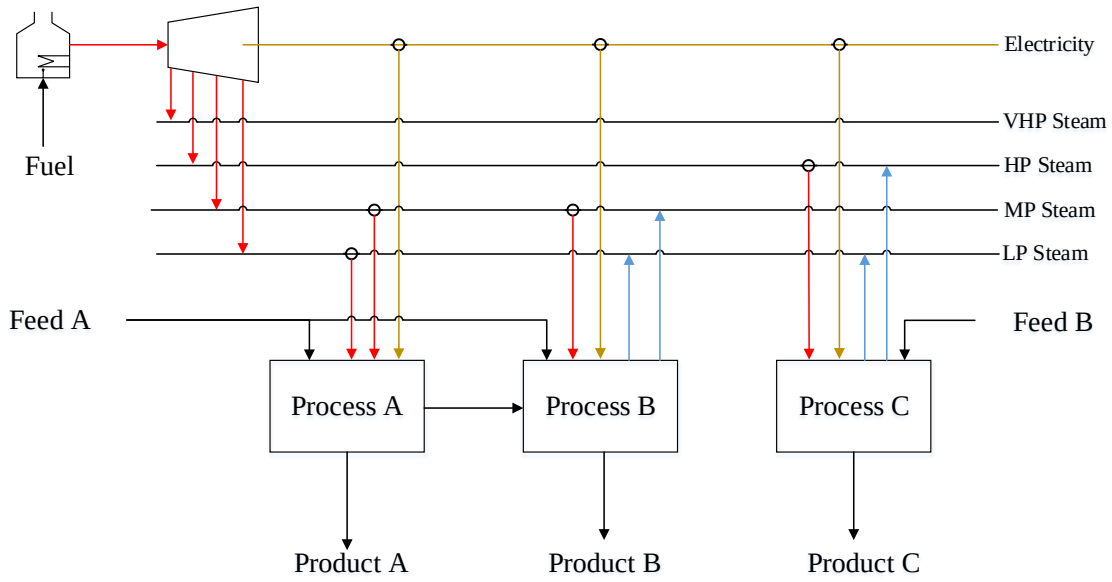

Figure 18: Total Site Mass, Heat and Power Integration (TSMHPI) problem.

4.2 Case Studies

TSHI case studies are divided into three sub-sections covering a total of eight articles. The first section focused on TSHI of milk powder productions that are stand-alone. The second section presents four articles that applied Heat Recovery Loop approach to the site-wide integration of hot water as well as the integration of solar heat. The third and final section presents an article with a biorefinery case study.

4.2.1 Total Site Heat Integration and Optimisation of Milk Powder Production

Traditionally minimising energy use has not been a primary focus in the dairy industry because energy costs represent only a small proportion of the total production cost [85]. However, the continuing pressure from rapidly rising fuel costs is providing a greater driver for improving energy efficiency. As a result, advanced thermodynamic approaches, such as Total Site Heat Integration, are required to help industry make a step change in energy efficiency.

In the milk powder process, some of the stream data is “soft”, meaning that some flow or temperature set points or target values can vary without impacting the process,

product quality and safety. Variations to present stream data may be achieved in several ways, such as by applying new control set-points to the existing process. Designers can use this flexibility to their advantage by varying soft data within a defined range to obtain a minimum energy use target. Soft data selection can also significantly impact the development of heat exchanger network structures that are designed to maximise heat recovery.

In the first application[12], TSHI was applied to determine the impact of soft data selection on the Total Site energy targets and the Pinch Temperature of milk powder production. Process stream data was extracted from an industrial plant and Pinch analysis was applied to calculate utility and heat recovery targets. Some soft process data was varied, within small ranges that do not harm product quality or violate the environmental regulations, to minimise utility use targets. Using the Pinch Design Method and the targets as a guide, Maximum Energy Recovery networks were developed for two cases, where the condenser in the evaporator section of the plant may be directly or indirectly integrating into the remainder of the process. The two MER networks were compared to two heat exchanger network structures commonly implemented in industry. Results showed that there was potential to increase specific heat recovery by over 30 % using standard process designs for the evaporation system while reducing total cost by almost 10 % in the best case. To achieve maximum energy recovery, spray dryer exhaust air heat recovery was necessary and should be matched to preheat the dryer inlet air stream.

The initial TSHI study highlighted the need to investigate addition process and utility integration opportunities. The study was followed by a detailed analysis and PI integration of the milk evaporation system by the appropriate placement of vapour recompression operations [86]. The opportunity of spray dryer exhaust heat recovery including a detailed and validated model was another important step [87]. After exhausting the energy savings potential within the process system, the follow-up work considered ways to save energy within the utility system through the practical application of condensing economisers and waste heat upgrading and recovery from chillers [88].

The contributions of the integrated process design for the milk evaporation, spray dryer and utility system were then combined to create a new Ultra-Low Energy Milk Powder Production design[13]. It was the capstone of several years progress toward low-energy

[12] **Article 12:** Walmsley, T.G., Walmsley, M.R.W., Atkins, M.J., Neale, J.R., 2013. Improving energy recovery in milk powder production through soft data optimisation. Applied Thermal Engineering 61, 80–87. DOI: 10.1016/j.applthermaleng.2013.01.051

[13] **Article 13:** Walmsley, T.G., Atkins, M.J., Walmsley, M.R.W., Philipp, M., Peesel, R.-H., 2018. Process and utility systems integration and optimisation for ultra-low energy milk powder production. Energy 146, 67–81. DOI: 10.1016/j.energy.2017.04.142

milk powder production. The basis for the analysis was a state-of-the-art modern milk powder plant that required 5,265 MJ/t_p of fuel and 210.5 kWh/t_p (58.5 MJ_e/t_p) of electricity. The model of the modern milk powder plant was validated against industrial data and changes to process and/or utility systems were targeted and implemented into the model to understand the impacts on thermal and electrical demands and emissions. Results showed that seven significant changes were beneficial: (1) pre-concentration of milk to 30 % using reverse osmosis, (2) a two-stage intermediate concentrate (30 %) homogenisation to enable high solids (60 %) spray drying, (3) an ultra-low energy Mechanical Vapour Recompression evaporator system, (4) spray dryer exhaust heat recovery, (5) condensing economiser for the boiler, (6) upgrade and integration of chiller condenser heat, and (7) recycling of air in the building ventilation system.

These changes were estimated to reduce thermal energy use by 51.5 %, electricity use by 19.0 %, and emissions by 48.6 % compared to a modern milk powder plant. The comparison of energy use by modern (Design 1.0) and ultra-low energy (Design 3.0) are presented in Figure 19.

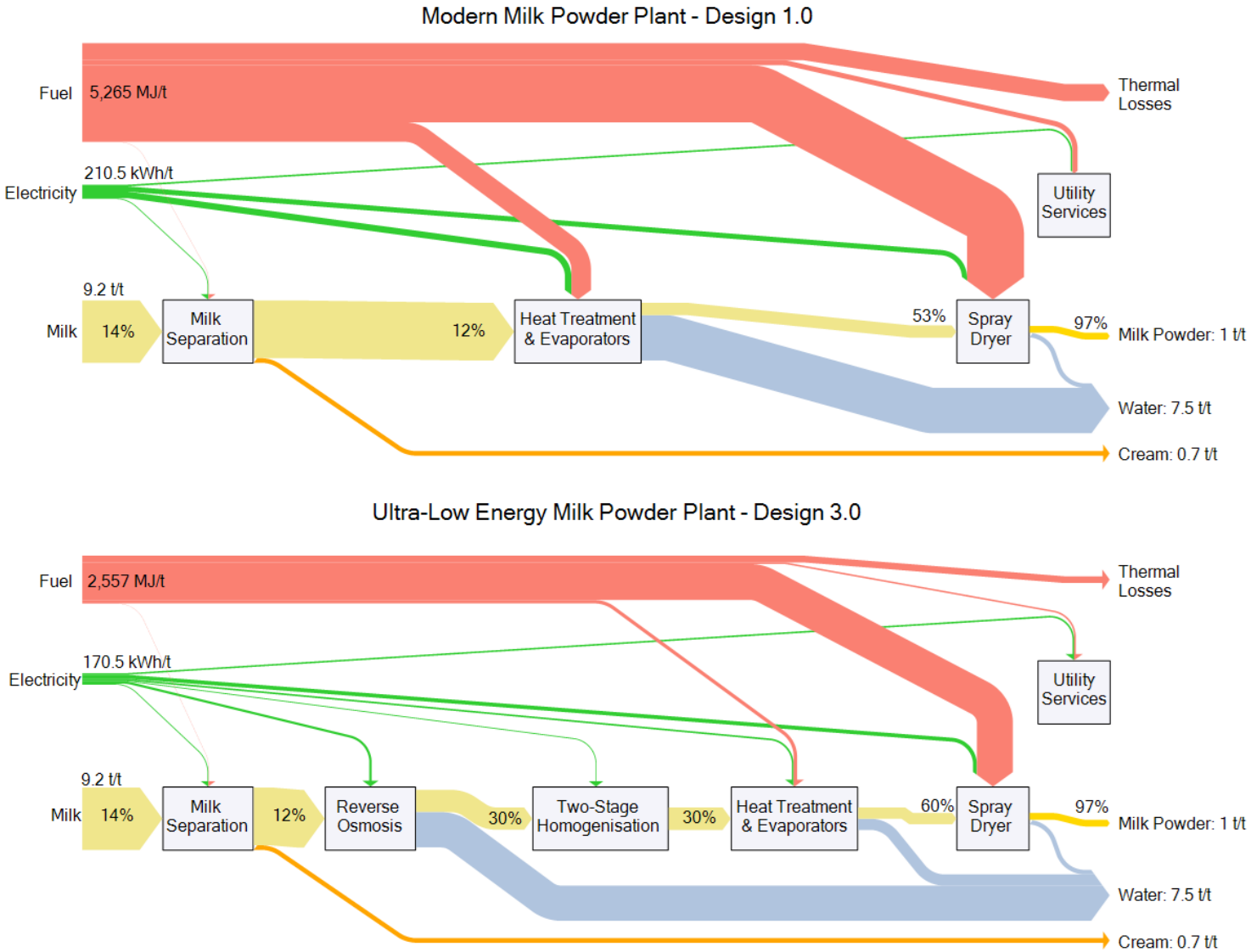

Figure 19: Sankey diagrams for a modern milk powder plant and an ultra-low energy milk powder plant, comparing energy, water removal, and product flows.

4.2.2 Heat Recovery Loops for Site-wide Dairy Factory Heat Integration

The Heat Recovery Loop concept is a sub-set of TSHI that use a hot water loop that has a fixed network structure, as shown in Figure 20. HRL were the subject of another series of papers that formalised a complete design method [89], analysed the basis for heat exchanger area sizing [75], developed a new variable temperature storage concept [70], explored several options of solar thermal integration into existing HRLs [76], as well as heat transfer enhancement through the application of nanofluids [28].

Heat Recovery Loops are often applied to indirectly recover and place heat in processing clusters with processing and Pinch Temperatures below 100 °C [15]. In a Heat Recovery Loop system, an intermediate fluid, usually water, is pumped to plants with excess heat in the desired temperature range to recover heat. The fluid is then piped back to a tank, which acts as thermal storage, before being sent to plants that require heating in the same temperature range. The system is closed and the fluid is continuously circulated depending on the heating and cooling requirements of the various processes. Fluid storage acts as a buffer to mass and enthalpy imbalances between the hot and cold sides of the loop and is ideal for improving HR on large multi-process sites with lots of semi-continuous processes in operation.

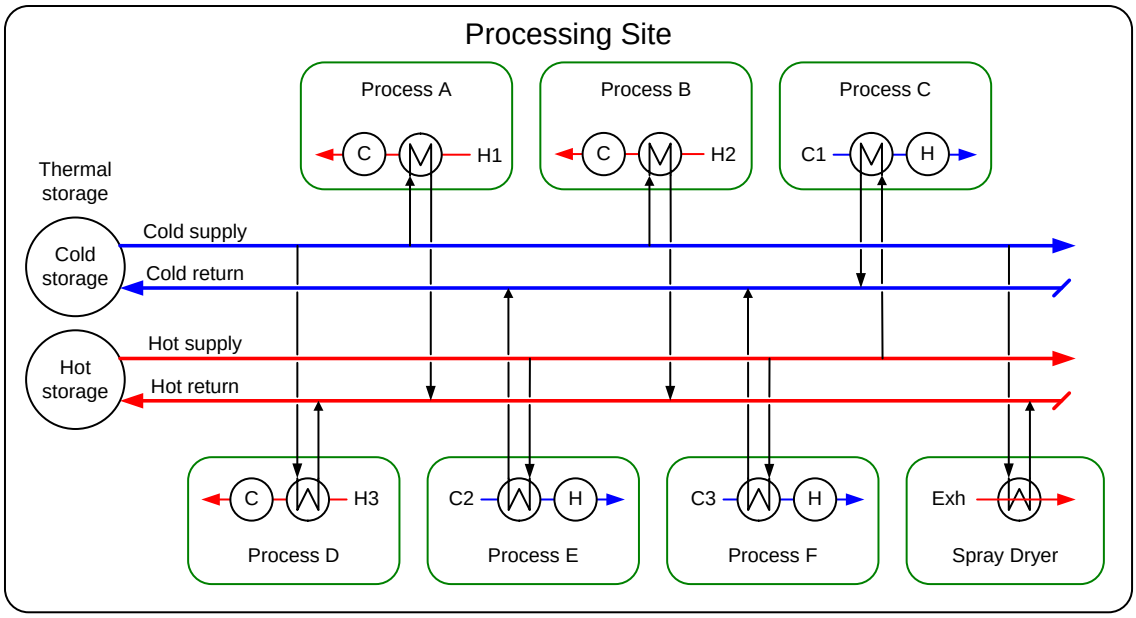

Figure 20: Heat recovery loop network including the milk powder plant spray dryer.

The interrelationship between HRL storage temperatures, heat recovery and total HRL exchanger area contain an interesting trade-off [75]. A methodology for designing a HRL based on a ΔT_{min} approach was developed to compare to three programming optimisation approaches where heat exchangers are constrained to have the same Number of Heat Transfer Units (NTU), Log-Mean Temperature Difference (LMTD) or to

find the absolute Minimum Total Area (MTA) for a given heat recovery level. The analysis was performed using time-averaged and transient mass flow rate data and temperature data. The actual temperature driving force of the HRL heat exchangers was compared to the apparent driving force as indicated by the Composite Curves. Results for the same heat recovery level showed that the ΔT_{min} approach is effective at minimising total area to within 5 % of the global minimum area approach. Allocation of individual heat exchanger areas can vary widely depending on the optimisation method, the characteristics of the transient stream data, and the differences in the approach and exit stream temperatures. Results further suggested that using the ΔT_{min} method for selecting storage temperatures in combination with sizing exchangers based on the time average heat capacity flow rate values (for while the process is running) gives a near optimal solution without requiring lots of data input or computing resources.

Combining solar heating with Heat Recovery Loops is a cost-effective way to share common storage and piping infrastructure. The conventional HRL design method based on a CTS (constant temperature storage) and a new HRL design method using VTS (variable temperature storage) were applied to demonstrate the potential benefits of inter-plant heat integration and installing solar heating[14]. The dairy case study had available 12 source streams including four spray dryer exhausts and six sink streams. The addition of the dryer exhausts as heat sources was a critical factor in gaining a heat recovery of 10.8 MW for the variable temperature storage design, of which 5.1 MW was contributed from exhaust heat recovery. For the same minimum approach temperature, the variable temperature storage design approach achieved 37 % more heat recovery compared to the constant temperature storage design approach. Solar heating also proved to be a valuable source to be integrated into a Heat Recovery Loop with a Pinch around the cold storage tank as illustrated in Figure 21.

Integration of solar thermal energy into low-temperature Pinch processes, like dairy and food and beverage processes, is more economic when combined with a Heat Recovery Loop to form a combined inter-plant heat recovery and renewable energy utility system. The combined system shares common infrastructure such as piping, pumping and storage, and improves solar heat utilisation through direct solar boosting of the HRL intermediate fluid's temperature and enthalpy either through parallel or series integration relative to the other sources and sinks in the HRL system. The three options for integrating solar thermal directly into a Heat Recovery Loop, Figure 22, were dynamically

[14] **Article 14:** Walmsley, T.G., Walmsley, M.R.W., Atkins, M.J., Neale, J.R., 2014. Integration of industrial solar and gaseous waste heat into heat recovery loops using constant and variable temperature storage. Energy 75, 53–67. DOI: 10.1016/j.energy.2014.01.103

modelled using historical plant data from a large multi-plant dairy case study to demonstrate the hot utility savings potential of the solar-HRL system [76]. Case study results showed the best location for integrating solar heating into a Heat Recovery Loop is in series with the heat sources as the hot fluid returns to the storage tank. This configuration maximised the effectiveness of collecting solar heat as a meaningful replacement of non-renewable process heat.

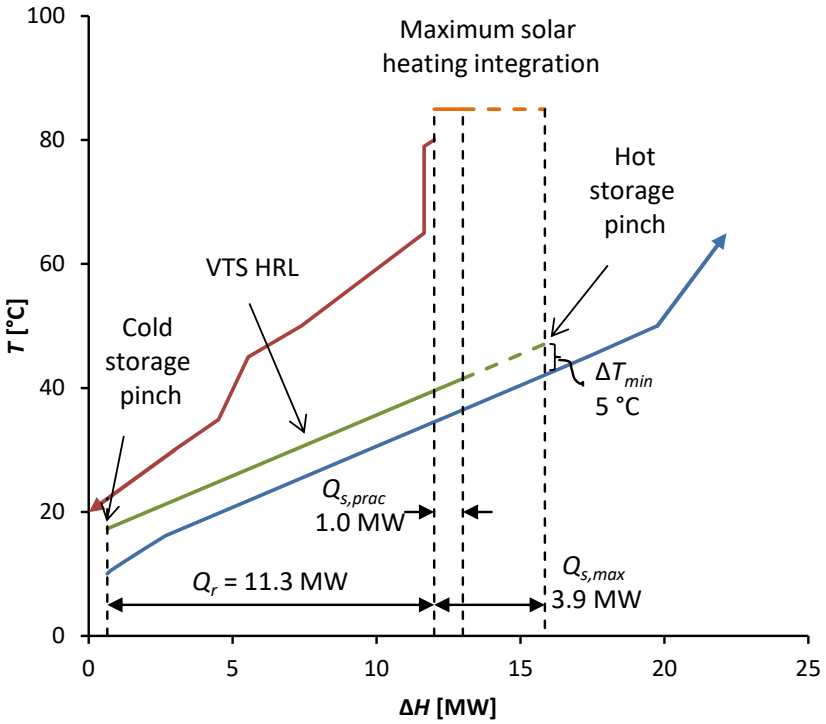

Figure 21: Maximum and practical average heat recovery and solar heating targets for a VTS HRL based on a ΔT_{min} of 5 °C.

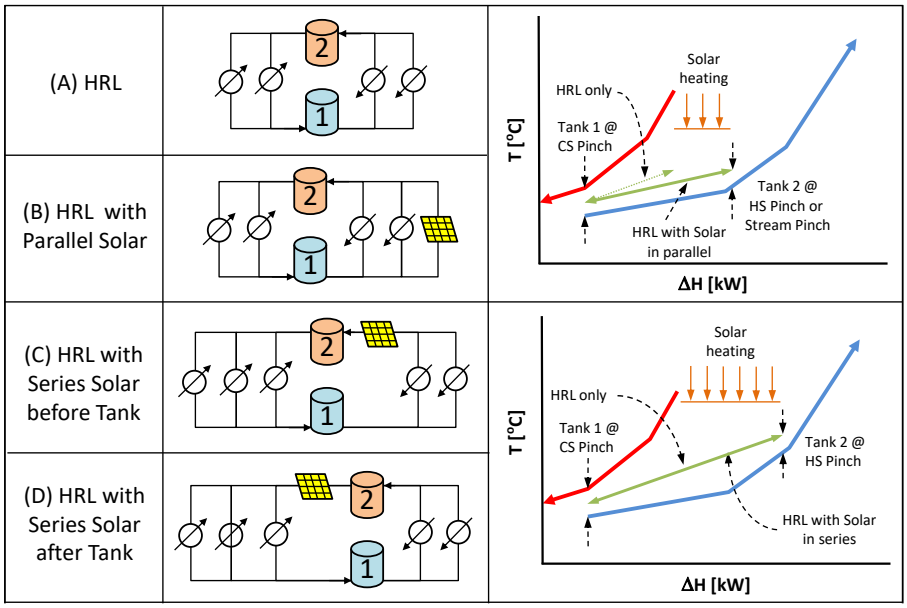

Figure 22: Solar-HRL system configurations and Composite Curves for two tank systems.

4.2.3 Total Site Utility Systems Design using P-graph

Sustained growth in renewable electricity generation has changed the dynamics of many electricity markets. Large swings between high-peak and low-off-peak electricity prices resulting from the complex interplay between intermittent renewable energy supply, continuously fluctuating electricity demands, and market structure and policy [90]. To maintain a functional grid, electricity spot prices decrease to encourage greater consumption and increase to discourage. Locally Integrated Energy Sectors – LIES [21] and Total Sites [9] can profit from periods of both low and high electricity prices through the right technology investments. For example, with Combined Heat and Power (CHP), a site may increase electricity exports when the price is high and, with heat pumps, a site may increase electricity imports when the price is low. The structural design of the central utility system with built-in degrees of freedom (e.g. spare capacity) holds the key to a system becoming responsive to grid dynamics.

This contribution[15] aimed to optimise the structural design of industrial central utility systems to take full advantage of intra-day electricity spot price fluctuations. Surges in renewable electricity generation uptake have amplified the rises and falls between peak and off-peak electricity prices. Industrial Total Sites and Locally Integrated Energy Sectors can take maximum advantage of periods of both low and high electricity prices through appropriate technology investment.

The historical price fluctuations in wholesale electricity index for the EU-28 are presented in Figure 23. The median hourly electricity price trend for a daily cycle shows a low trough (4 a.m.) during the night, a small peak in the morning (8 a.m.) followed by a downturn in the afternoon before rising to a high peak in the evening (7 p.m.). The absolute electricity price is heavily influenced by the season as indicated by the individual trends for the different days. Ordering all electricity price provides a sense of the frequency that each price point arises. A three-period approximation of the ordered electricity price profile can be formulated (Figure 23B). There is a trade-off between the accuracy of the approximation (i.e. more periods) and the computational burden and is an area that may attract attention in future work.

[15] **Article 15:** Walmsley, T.G., Philipp, M., Varbanov, P.S., Klemeš, J.J., 2018. Total Site Utility Systems Structural Design Considering Electricity Price Fluctuations. Computer-Aided Chemical Engineering, accepted article.

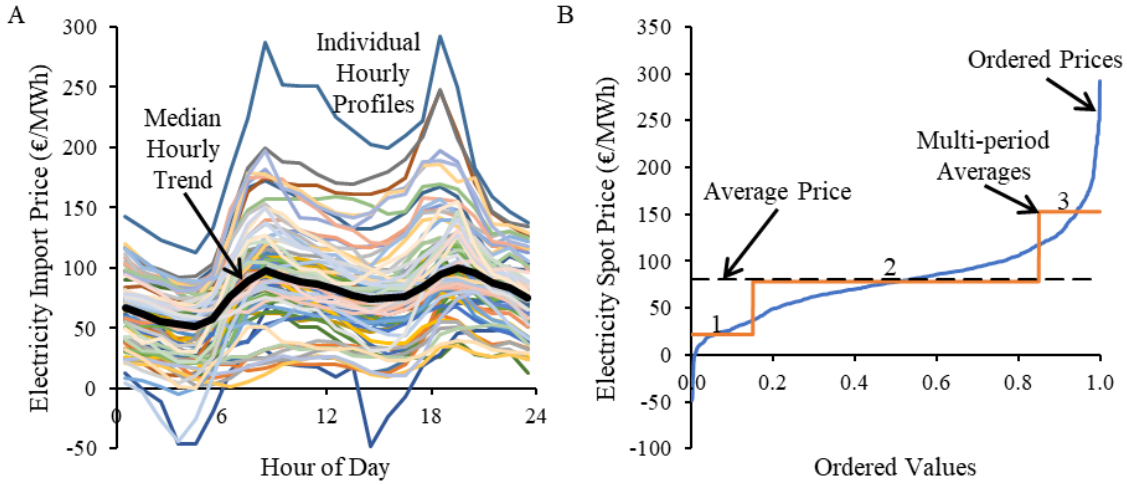

Figure 23: Electricity price with daily profiles for a sample of 84 d in 2017 (A) and by ordered values with single average and multi-period averages (B).

Using P-graph, a Utility Systems Planner superstructure was developed and extended to apply a multi-period analysis to optimise the selection of the fuels, energy conversion technologies, and the required sizes to install for a representative case study. A key difference between the multi-period solution and the single-period solution, Figure 24, is an Electric Boiler that operates when the electricity price is low. This resulted in a Total Annual Cost saving of 7.5 %.

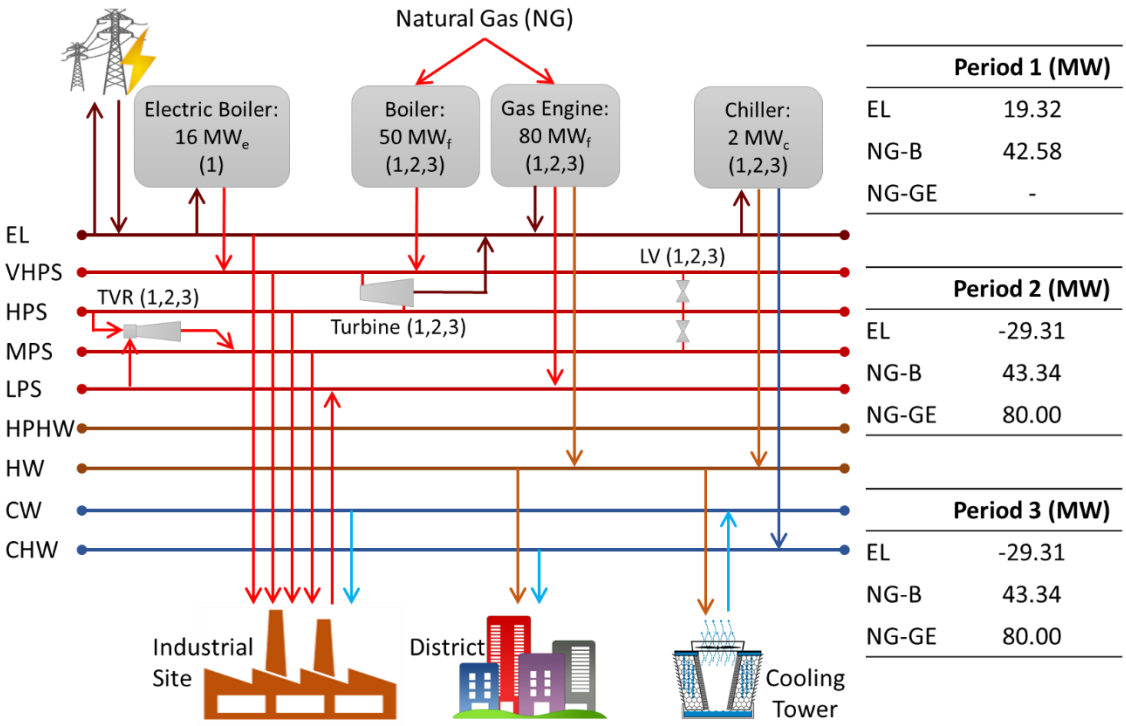

Figure 24: Utility systems structural design with key fuel and equipment for minimum Total Annual Cost.

CHAPTER 5
MACRO ENERGY PLANNING AND INTEGRATION

5.1 Novel and Innovative Methods

The novel and innovative contributions to methodology development in macro-energy systems focus on two areas. The first area is energy planning using Energy Ratios. The second area is targeting localised Waste-to-Energy networks.

5.1.1 Energy Ratio Analysis and Accounting for Renewable and Non-Renewable Electricity Generation

Sustainability metrics and indices are important tools to quantify the environmental, social, and economic impact of industrial processes and human activity [91]. Where economic analyses may be affected and blurred by dynamic market prices, capital cost competition, and government policy, sustainability metrics are established based on fundamental science and engineering principles [92]. In this way, these metrics describe an independent outlook of the value for or against investigated activities and strategic plans. A few examples of sustainability metrics and indices include footprint analysis [93], carbon emissions analysis [33], energy intensity, energy return on investment, energy payback [44], energy security [94], human risk assessment [95], as well as multidimensional metrics and analysis [96]. This paper focuses on analysing and comparing energy ratio-based sustainability metrics. Energy Ratios (ER) are dimensionless metrics where an energy output (or input) is typically divided by an energy input (or output). The concept of an ER is valuable for analysing the fundamental viability of a resource. It can also include the energy cost of mitigating environmental issues such as carbon emissions through the addition of Carbon Capture and Sequestration (CCS) as an integral process [39]. Various types of ERs have been proposed in the literature as energy planning and sustainability metrics. Three categories of ERs are the Energy Return on Investment (EROI), Energy Payback Time (EPT), and Primary Energy Factor (PEF). Determination of these metrics often requires Life Cycle Assessment (LCA) in combination with Net Energy Analysis but differ in what energy flows are accounted as part of the ER.

The study reviewed and compared five Energy Ratios that may be used in energy planning studies and as sustainability metrics for evaluating common electricity generation methods. The Energy Ratios included Energy Return on Investment (EROI)

– standard and external, Energy Payback Time (EPT), Primary Energy Factor (PEF), and Resource Utilisation Factor (RUF). A common energy analysis framework (Figure 25), together with three accounting methods based on energy value, exergy, and primary energy, were described. The concept of the time-value for energy as an analogy to the time-value for money was synthesised into the Energy Ratio calculations.

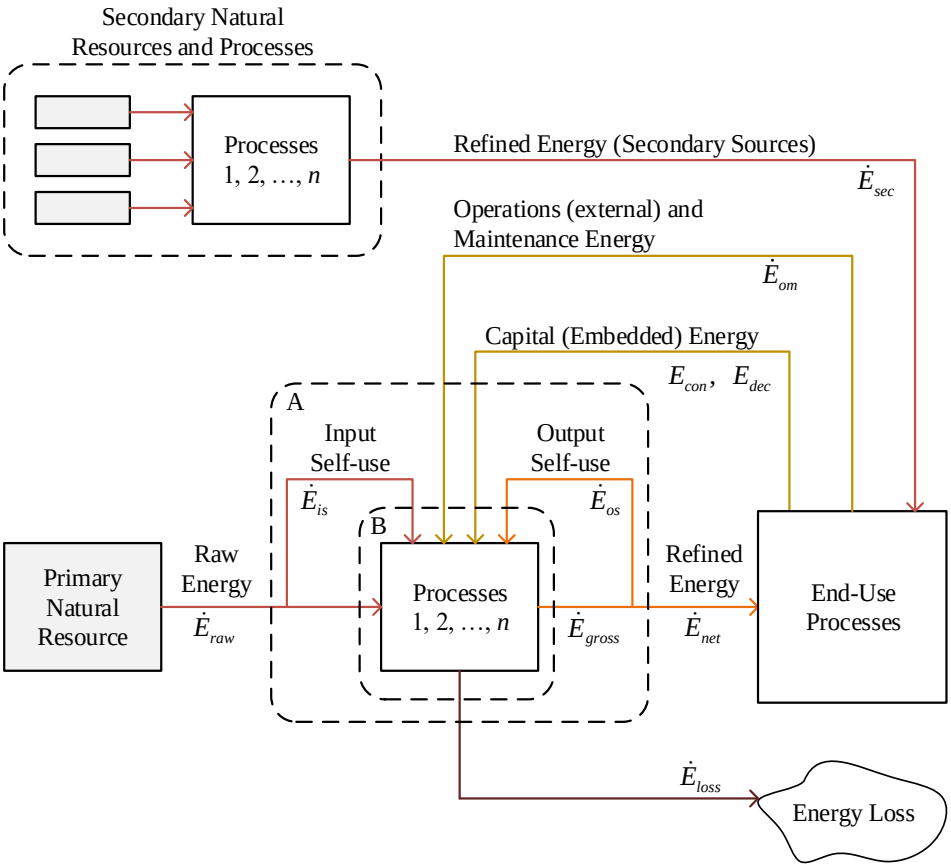

Figure 25: Energy systems analysis framework.

The analysis framework was implemented in a spreadsheet tool and applied to analyse 45 generation projects. Results for EROI and Energy Payback Time rank nuclear, natural gas CCGT, and geothermal (in Iceland) as the top-performing generation methods with $EROI_{ext}$ values exceeding 30 and Energy Payback Times less than 2.5 months. The second tier of generation performance includes hydro, wind, geothermal (in New Zealand) and coal power stations with $EROI_{ext}$ values of 5 – 30. Last of all, solar PV consistently achieves the poorest Energy Ratios with $EROI_{ext}$ values between 0.5 – 7.6 and significantly longer Energy Payback Times compared to other generation options. Accounting for the time-value of energy has a very significant impact on the calculated Energy Ratios. The energy accounting method has a similarly critical effect. Energy Ratio performance levels for renewable energy generation sources – hydro, wind, geothermal and solar – all rely heavily on the quality of the primary natural resource available. This

study concludes that $EROI_{ext}$ and Resource Utilisation Factor are the recommended Energy Ratio metrics for inclusion in full sustainability assessment and that it is critically important to account for both energy quality and the time-value of energy.

The work is currently under review for publication in Renewable and Sustainable Energy Reviews.

5.1.2 Networks for Utilising the Organic and Dry Fractions of Municipal Waste: P-graph Approach

MSW management comprises a number of important activities. The overall management involves a number of steps: collecting the waste from the households or collection points in the neighbourhoods, transportation to transfer stations and/or processing facilities, waste processing – including sorting, separation, treatment, thermal treatment, and anaerobic digestion. An important step towards modelling the identified problem is the model for optimal allocation of capacities among waste generation areas and waste processing facilities, which also includes energy recovery from waste. The proposed optimisation model minimises an objective function, based on a weighted sum of the transportation distances for waste collection and delivery to the processing centres. However, this consideration still leaves open the question of the optimal sizes and collection areas of the Waste-to-Energy facilities, the potential for GHG emissions reduction and the possible energy recovery rates in relation to the size of the collection zone. In general, the approach for Waste-to-Energy studies has been to undertake comprehensive Waste-to-Energy modelling including waste transportation for specific cities and regions. This has the distinct advantage of providing a rigorous solution from which decisions can be implemented. However, the disadvantage is that these studies require significant amounts of time and resources. Providing a preliminary performance target for a Waste-to-Energy supply chain system before undertaking comprehensive modelling and design represents a gap in the current literature.

The aim of this work was to apply a new model for preliminary targeting of Waste-to-Energy supply chains. Using the performance targets, the trade-off between the emissions, energy and cost reduction resulting from the potential Waste-to-Energy implementation may be understood, allowing the consideration of lower-scale Waste-to-Energy facilities alongside the large-scale ones. The work built upon the WTE targeting model proposed in Walmsley et al. [97] and extended it by providing a derivation of the underlying targeting model and then applied it to a case study based on a set of price data from official statistical sources and performance specifications derived from the literature. The evaluation scheme investigated the WtE supply chain performance for

ranges of area and population sizes and two levels of population density, typical for Europe. The final segment of the study looked to clearly address the challenges posed by the waste logistics and directions for future research. The full journal article that reports this work is currently under review for publication in Frontiers of Chemical Science Engineering.

Figure 26 presents the system superstructure as an initial P-graph created in P-Graph Studio [98].

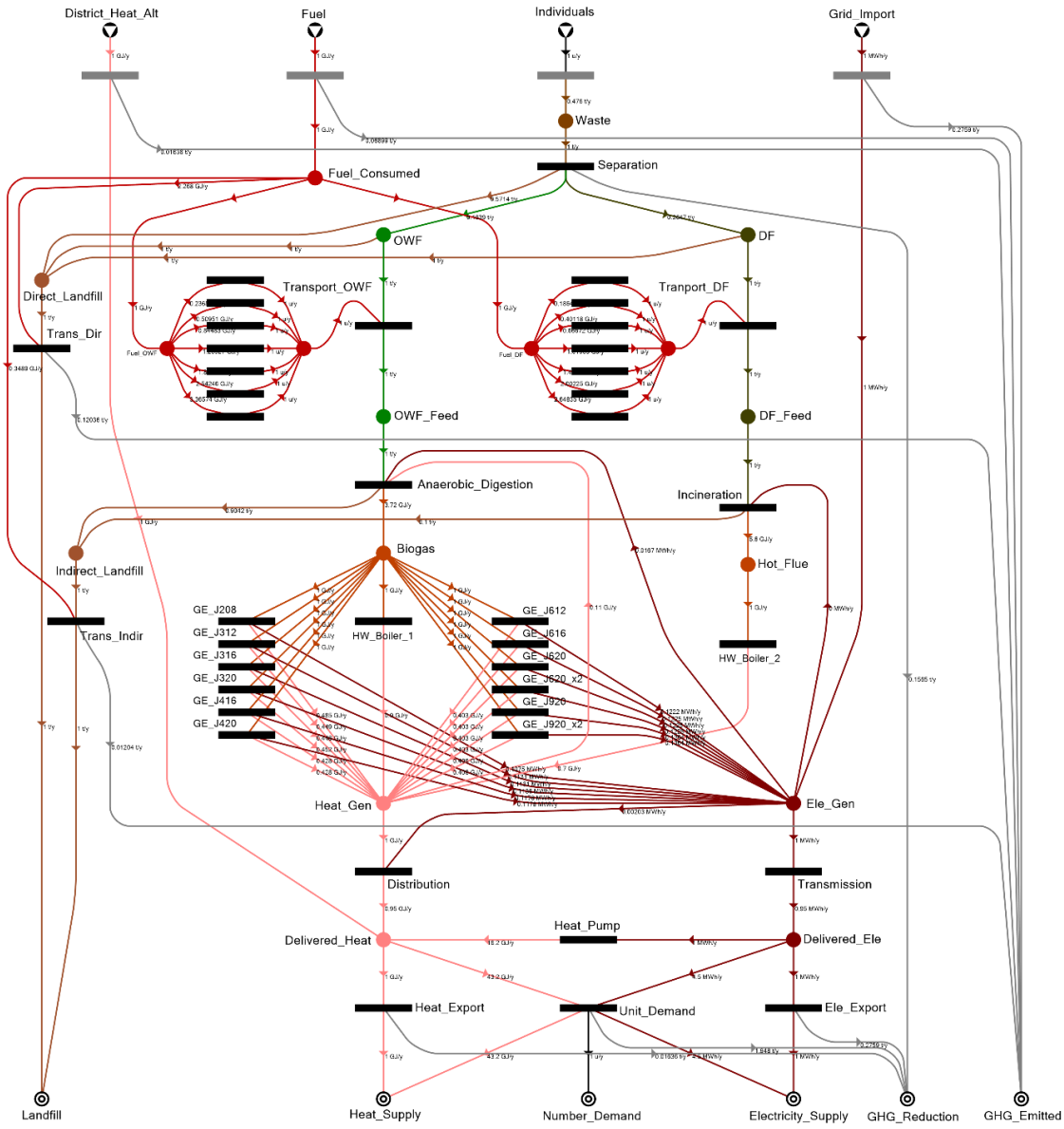

Figure 26: A visual superstructure of the Waste-to-Energy problem in P-graph Studio

The targeted performance trends for GHG emission savings and energy recovery showed that the influence of the transportation distance on the energy and GHG performance is substantial. The population density shifts the performance curves, where

higher population density allows for higher energy generation and GHG savings that can surpass the GHG emitted for waste transportation, creating an overall carbon sink.

The developed P-graph model can easily be adapted to specific cases of population and waste density and evaluate the situation within European and wider context. The presented case study fully shows that the increased collection zone size and transportation distances lead to deteriorating performance, which is expected to be in addition to any implementation complexities.

The GHG displacement and energy recovery remain substantial and it is still better to process the waste for energy recovery compared with the simple landfilling. If maximum benefits should be sought in terms of real net GHG savings and maximum energy recovery with possible energy gain, the waste transportation distances should be minimised as much as practically possible, accounting for the potential investments, as well as for the relevant safety and environmental regulations, specific for each country.

5.2 Case Studies

5.2.1 New Zealand Energy Sector Planning for GHG Emissions Reductions

In a series of three articles, the New Zealand energy sectors of electricity [39], transport [99] and process heat [100] were studied using the lenses of Carbon Emissions Pinch Analysis [33] and Energy Return on Energy Investment analysis [41].

In the first paper[16], Carbon Emissions Pinch Analysis and Energy Return on Energy Investment analysis were combined to investigate the feasibility of New Zealand reaching and maintaining a renewables electricity target above 90 % through to 2050, while also increasing electricity generation at an annual rate of 1.5 % and allowing for a 50 % switch to plug-in electric vehicle transportation for personal use vehicles. Under this scenario, New Zealand's electricity demand was anticipated to reach a maximum of between 70 and 75 TWh by 2050. Future electricity generation planning solutions were based on a simple optimisation method. For different carbon emissions cap, the electricity generation mix that gave the lowest total energy investment was determined by the results presented in Figure 27.

If New Zealand forced to achieve the 1990 carbon emissions level of 3,730 kt CO_2-e in 2050, electricity growth will need to come from wind (18 TWh) and geothermal (13 TWh),

[16] **Article 16:** Walmsley, M.R.W., Walmsley, T.G., Atkins, M.J., Kamp, P.J.J., Neale, J.R., 2014. Minimising carbon emissions and energy expended for electricity generation in New Zealand through to 2050. Applied Energy 135, 656–665. DOI: 10.1016/j.apenergy.2014.04.048

and hydro (5.6 TWh). This combination of sources minimised the energy investment required from the economy. Renewable resources were needed produce close to 95 % of electricity generation. The analysis demonstrated that New Zealand is in a very good position to sustainably meet the future electricity needs while maintaining very low carbon emissions levels and economically desirable Energy Return on Energy Investment levels.

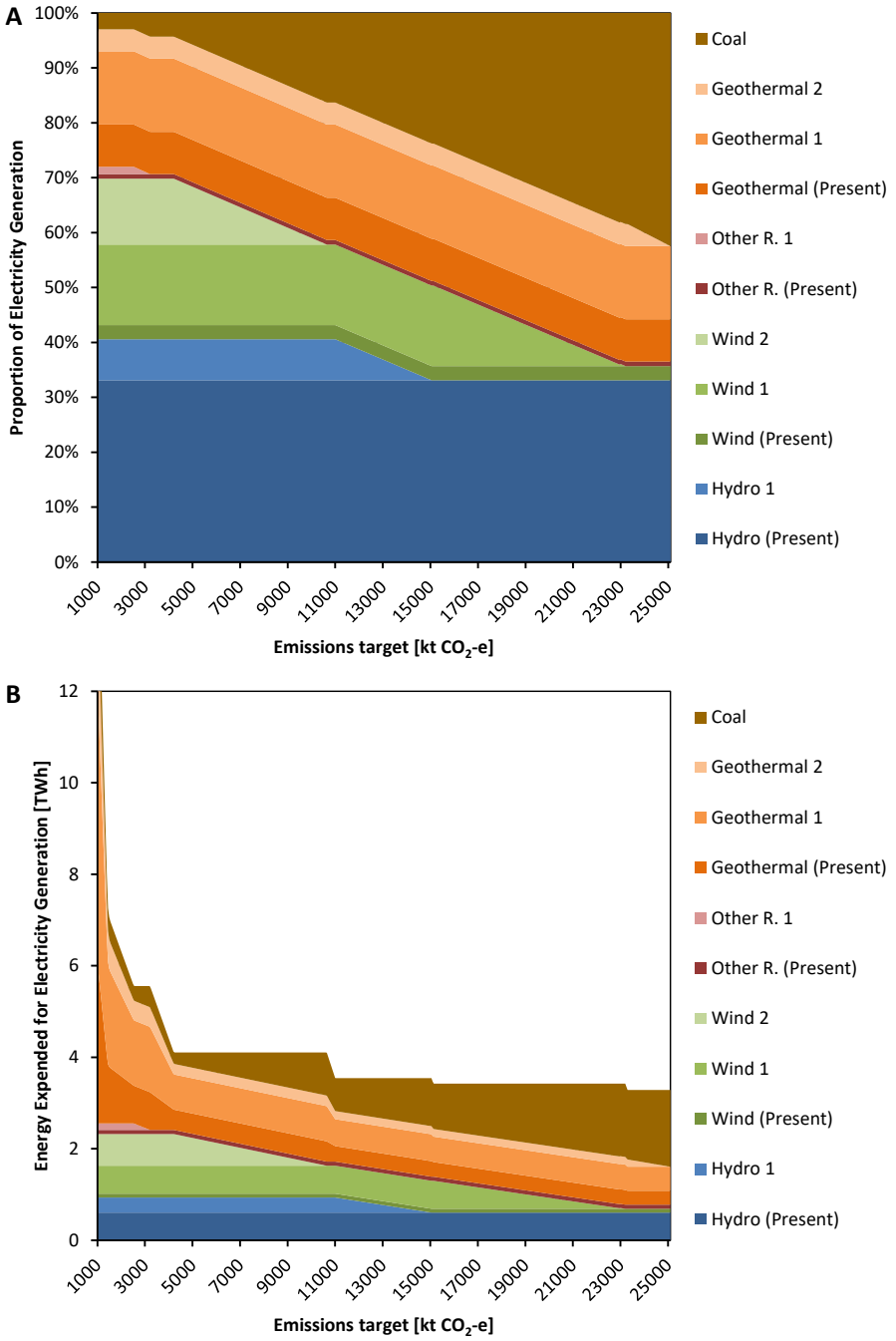

Figure 27: Summary of (a) optimised generation mix to meet 2050 demand with (b) minimum expended energy.

In the second paper of this line of work[17], the Carbon Emissions Pinch Analysis method for energy planning was modified for improved application to transport energy sectors. The modified method was applied to investigate the feasibility of New Zealand reaching a 1990 emission level for transport by 2050. The transportation sector has been traditionally a difficult area to transition to high levels of renewable energy because of the strong dependency on fossil fuels.

Using the Carbon Emissions Pinch Analysis composite curve method the freight and passenger transport demands in New Zealand for the year 2012 are illustrated in Figure 28. The fuel supply composite curve has not been included in Figure 28 because it cannot clearly be distinguished from the demand curve, which is due to all current transport fuels being derived from crude oil with very similar Emission Factors within each vehicle class. Figure 28 shows passenger transport contributes 12% of the useful transport output but is responsible for 71% of transport emissions. The total freight transport demand and emissions for NZ in 2012 were 95.9 Mt-km and 5.0 Mt CO_2-e respectively (Transport Emission Factor: TEF = 0.052 Mt CO_2-e/Mt-km). The total passenger transport demand and emissions for NZ were 13.1 Gt-km and 12.4 Mt CO_2-e respectively (TEF = 0.944 Mt CO_2-e/Mt-km). In both cases the amount powered by renewable fuels was negligible.

Factors vary depending on the freight or passenger load factor, engine technology and tare weight differences rather than fuel differences. Marine transport is clearly very efficient at transporting both freight and people with marine vessels having the lowest emission factors in both demand classes. Freight rail is equally a low emissions transport method and road freight methods are the highest. It is important to note that although road freight methods have the highest emissions factors, they have additional cost benefits of being flexible giving point-to-point delivery with minimal handling stages.

With passenger transport, Light Personal Vehicles – LPV stands out as generating 65% of passenger transport emissions while delivering only 28% of the useful transport output. High Factors for rail and bus are principally caused by low participation rates as a result of high LPV use, and as a result, the useful transport output from these classes is relatively small. Air transport, including domestic and international travel, contributes 27% of passenger transport emissions and provides 25% of the useful transport output.

[17] **Article 17:** Walmsley, M.R.W., Walmsley, T.G., Atkins, M.J., Kamp, P.J.J., Neale, J.R., Chand, A., 2015. Carbon Emissions Pinch Analysis for emissions reductions in the New Zealand transport sector through to 2050. Energy 92, Part 3, 569–576. DOI: 10.1016/j.energy.2015.04.069

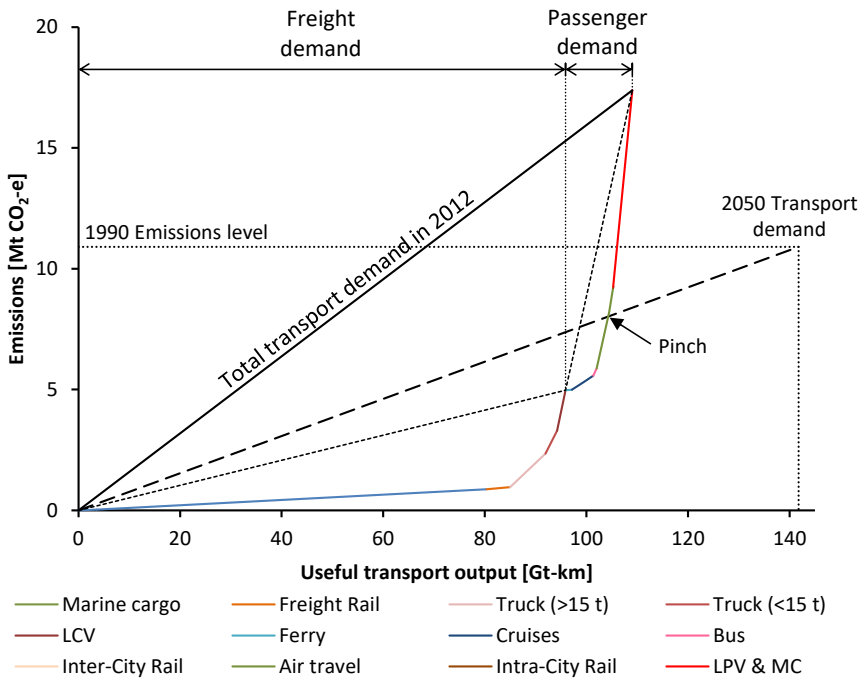

Figure 28: Combined emissions composite curve for freight and passenger transport demand by transport purpose and class in New Zealand for 2012 and the target for 2050.

For New Zealand, identified steps for low carbon emissions from transport were: (1) the electrification of all rail, (2) the wide-spread adoption of energy efficient vehicle technologies, (3) the partial electrification of light passenger vehicles through plug-in hybrid and electric vehicle technologies, and (4), the introduction of liquid fuels from biomass as an alternative to liquid fuels from petroleum.

In the final segment of the series, options for reducing industrial process heat GHG emissions in New Zealand were investigated in this paper using the Carbon Emissions Pinch Analysis and Energy Return on Energy Invested analysis methods. Renewable sources like geothermal, biomass, biogas from animal waste and heat pumps from renewable electricity were spatially plotted on a map of New Zealand, Figure 29, to understand the locations of energy resources and demands. Results indicated that some regions of New Zealand were well placed to make significant reductions to process heat GHG emissions through shifting from fossil fuel heating to renewable heating without a large increase in energy investment. Reducing GHG emissions below 1990 levels could be achieved by using wood waste and biomass in place of coal (33.3 PJ) and biogas from animal waste in place of natural gas (12.1 PJ) where high-temperature heating is required (>90 °C), and renewable electricity driven heat pumps for low temperature heating (<90 °C) in dairy and meat processing industries (7.0 PJ). The expected increase in required energy investment was 20 %.

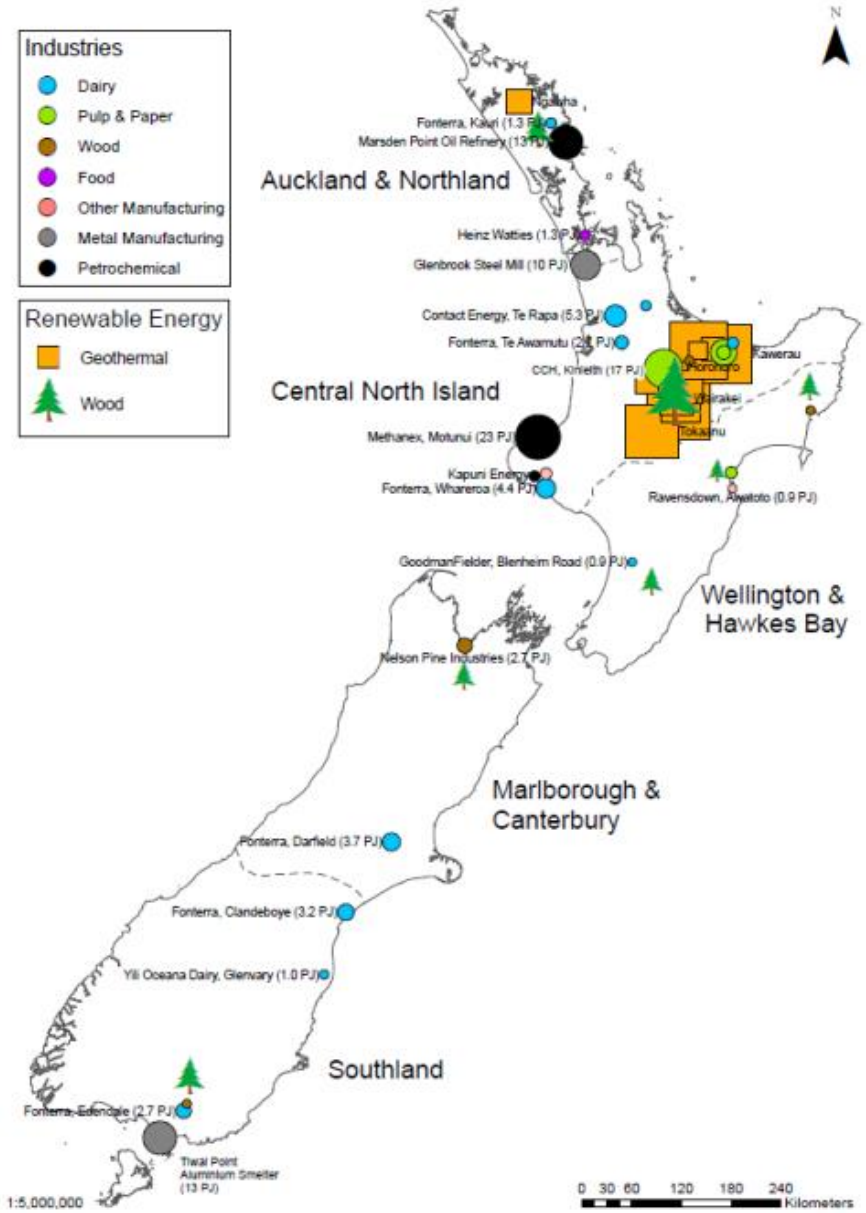

Figure 29: Map of process heat demand by industry type and geothermal and wood process heat supply in New Zealand in 2014.

5.2.2 Energy Return on Energy and Carbon Investment of Wind Energy Farms: A Case Study of New Zealand

Consistently high average wind speeds are critical to making wind an economically viable generation option. New Zealand has access to excellent wind resources. For example, the Cook Strait and Manawatu gorge, in the south of the North Island, channels strong winds creating prime locations for electricity generation. Most New Zealand wind energy farms operate at capacity factors greater than 30 %, with some individual turbines achieving over 50 %. For comparison, Denmark experiences slightly lower capacity

factors of 25 – 30 % [101]. The average capacity factor for wind energy farms in Europe is 21 %, with the highest being 57.9 % [102].

Economic analysis of wind energy potential in New Zealand is favourable for many sites. The Long Run Marginal Cost of wind and geothermal is between 80 and 100 NZD and are the two lowest cost options for new generation [103]. New Zealand has an open market with no direct subsidies or incentives for renewable generation other than the Emissions Trading Scheme, which requires electricity companies to purchase carbon credits equal to the quantum that is emitted, and market forces. A Government ministry commissioned study projects up to 6,600 MW of wind energy may be available across the nation [104] but not all of this potential will be economic.

The work in on wind energy in New Zealand[18] analysed the Energy Return on Investment and Energy Return on Carbon Emissions of current wind energy farms in New Zealand. The weighted average EROI for a New Zealand wind energy farm over a 20 y lifespan was 34.3, with the highest achieving 57.7, while the lowest was 6.5, as presented in Figure 30. These values were higher than wind energy farms in Europe and America, which average about 20, and higher than many other electricity generation methods reported in the literature with hydropower being the main exception. The above-average capacity factor of New Zealand wind energy farms is the primary reason for the higher Energy Return on Investment values. The average Energy Return on Carbon Emissions value for New Zealand's existing wind energy farms is 477 GJ/t CO_2-e, which is 56 times the value of a combined cycle natural gas power station. The substantial range of Energy Return on Investment values was chiefly driven by two factors: (1) wind speed profile for a given site and (2) the blade diameter of the turbine, where greater values are better. The main drawback of wind energy remains its variability causing reliability issues and needing hydropower as a renewable buffer to maintain low emissions.

[18] **Article 18:** Walmsley, T.G., Walmsley, M.R.W., Atkins, M.J., 2017. Energy Return on energy and carbon investment of wind energy farms: A case study of New Zealand. Journal of Cleaner Production 167, 885-895. DOI: 10.1016/j.jclepro.2017.08.040

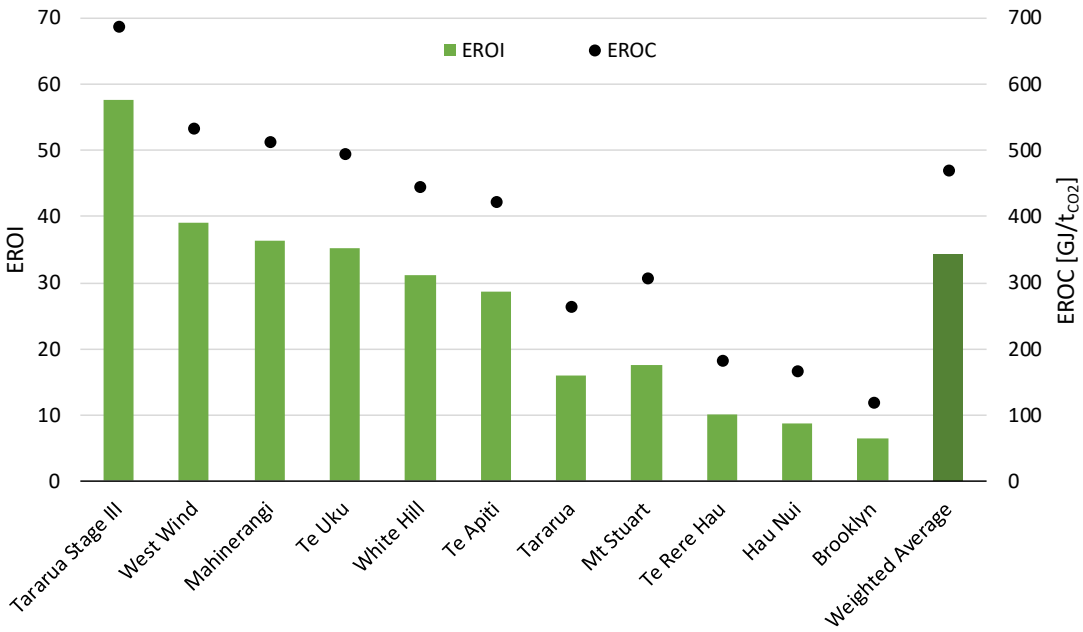

Figure 30: Energy Return on Investment – EROI and Energy Return on Carbon Emissions – EROC of existing New Zealand wind energy farms.

REFERENCES

[1] Klemeš JJ, Varbanov PS, Kravanja Z. Recent developments in Process Integration. Chemical Engineering Research and Design 2013;91:2037–53. doi:10.1016/j.cherd.2013.08.019.

[2] Klemeš JJ, Kravanja Z. Forty years of Heat Integration: Pinch Analysis (PA) and Mathematical Programming (MP). Current Opinion in Chemical Engineering 2013;2:461–74. doi:10.1016/j.coche.2013.10.003.

[3] Klemeš JJ. Handbook of process integration: Minimisation of energy and water use, waste and emissions. first. Cambridge, UK: Woodhead Publishing; 2013.

[4] Linnhoff B, Hindmarsh E. The pinch design method for heat exchanger networks. Chemical Engineering Science 1983;38:745–63. doi:10.1016/0009-2509(83)80185-7.

[5] Hackl R, Harvey S. Framework methodology for increased energy efficiency and renewable feedstock integration in industrial clusters. Applied Energy 2013;112:1500–9. doi:10.1016/j.apenergy.2013.03.083.

[6] Biegler LT, Grossmann IE, Westerberg AW. Systematic Methods of Chemical Process Design. 1 edition. Upper Saddle River, N.J: Prentice Hall; 1997.

[7] Furman KC, Sahinidis NV. A Critical Review and Annotated Bibliography for Heat Exchanger Network Synthesis in the 20th Century. Ind Eng Chem Res 2002;41:2335–70. doi:10.1021/ie010389e.

[8] Dhole VR, Linnhoff B. Total site targets for fuel, co-generation, emissions, and cooling. Computers & Chemical Engineering 1993;17:S101–S109. doi:10.1016/0098-1354(93)80214-8.

[9] Klemeš J, Dhole VR, Raissi K, Perry SJ, Puigjaner L. Targeting and design methodology for reduction of fuel, power and CO2 on total sites. Applied Thermal Engineering 1997;17:993–1003. doi:10.1016/S1359-4311(96)00087-7.

[10] Ahmad S, Hui DCW. Heat recovery between areas of integrity. Computers & Chemical Engineering 1991;15:809–32. doi:10.1016/0098-1354(91)80027-S.

[11] Hui CW, Ahmad S. Total site heat integration using the utility system. Computers & Chemical Engineering 1994;18:729–42. doi:10.1016/0098-1354(93)E0019-6.

[12] Bandyopadhyay S, Varghese J, Bansal V. Targeting for cogeneration potential through total site integration. Applied Thermal Engineering 2010;30:6–14. doi:10.1016/j.applthermaleng.2009.03.007.

[13] Raissi K. Total Site Integration. PhD Thesis. UMIST, 1994.

[14] Fritzson A, Berntsson T. Energy efficiency in the slaughter and meat processing industry—opportunities for improvements in future energy markets. Journal of Food Engineering 2006;77:792–802. doi:10.1016/j.jfoodeng.2005.08.005.

[15] Matsuda K, Hirochi Y, Tatsumi H, Shire T. Applying heat integration Total Site based pinch technology to a large industrial area in Japan to further improve performance of highly efficient process plants. Energy 2009;34:1687–92.

[16] Matsuda K, Hirochi Y, Kurosaki D, Kado Y. Application of Area-wide Pinch Technology to a Large Industrial Area in Thailand. Chemical Engineering Transactions 2014;39:1027–32. doi:10.3303/CET1439172.

[17] Hackl R, Harvey S. From heat integration targets toward implementation – A TSA (total site analysis)-based design approach for heat recovery systems in industrial clusters. Energy 2015;90, Part 1:163–72. doi:10.1016/j.energy.2015.05.135.

[18] Bonhivers JC, Svensson E, Berntsson T, Stuart PR. Comparison between pinch analysis and bridge analysis to retrofit the heat exchanger network of a kraft pulp mill. Applied Thermal Engineering 2014;70:369–79. doi:10.1016/j.applthermaleng.2014.04.052.

[19] Varbanov PS, Fodor Z, Klemeš JJ. Total Site targeting with process specific minimum temperature difference (ΔTmin). Energy 2012;44:20–8. doi:10.1016/j.energy.2011.12.025.

[20] Fodor Z, Klemeš JJ, Varbanov PS, Walmsley MRW, Atkins MJ, Walmsley TG. Total Site Targeting with Stream Specific Minimum Temperature Difference. Chemical Engineering Transactions 2012;29:409–14. doi:10.3303/CET1229069.

[21] Perry S, Klemeš JJ, Bulatov I. Integrating waste and renewable energy to reduce the carbon footprint of locally integrated energy sectors. Energy 2008;33:1489–97. doi:10.1016/j.energy.2008.03.008.

[22] Becker H, Maréchal F. Energy integration of industrial sites with heat exchange restrictions. Computers & Chemical Engineering 2012;37:104–18. doi:10.1016/j.compchemeng.2011.09.014.

[23] Liew PY, Wan Alwi SR, Klemeš JJ, Varbanov PS, Abdul Manan Z. Total Site Heat Integration with Seasonal Energy Availability. Chemical Engineering Transactions 2013;35:19–24. doi:10.3303/CET1335003.

[24] Liew PY, Wan Alwi SR, Varbanov PS, Manan ZA, Klemeš JJ. Centralised utility system planning for a Total Site Heat Integration network. Computers & Chemical Engineering 2013;57:104–11. doi:10.1016/j.compchemeng.2013.02.007.

[25] Liew PY, Lim JS, Wan Alwi SR, Abdul Manan Z, Varbanov PS, Klemeš JJ. A retrofit framework for Total Site heat recovery systems. Applied Energy 2014;135:778–90. doi:10.1016/j.apenergy.2014.03.090.

[26] Chew KH, Klemeš JJ, Wan Alwi SR, Manan ZA. Process modifications to maximise energy savings in total site heat integration. Applied Thermal Engineering 2015;78:731–9. doi:10.1016/j.applthermaleng.2014.04.044.

[27] Bade MH, Bandyopadhyay S. Minimization of Thermal Oil Flow Rate for Indirect Integration of Multiple Plants. Ind Eng Chem Res 2014;53:13146–56. doi:10.1021/ie502059f.

[28] Tarighaleslami AH, Walmsley TG, Atkins MJ, Walmsley MRW, Neale JR. Heat Transfer Enhancement for site level indirect heat recovery systems using nanofluids as the intermediate fluid. Applied Thermal Engineering 2016. doi:10.1016/j.applthermaleng.2016.03.132.

[29] Liew PY, Wan Alwi SR, Klemeš JJ, Varbanov PS, Abdul Manan Z. Algorithmic targeting for Total Site Heat Integration with variable energy supply/demand. Applied Thermal Engineering 2014;70:1073–83. doi:10.1016/j.applthermaleng.2014.03.014.

[30] Sun L, Doyle S, Smith R. Heat recovery and power targeting in utility systems. Energy 2015;84:196–206. doi:10.1016/j.energy.2015.02.087.

[31] Nemet A, Klemeš JJ, Kravanja Z. Mathematical Programming Approach to Total Site Heat Integration. Computer Aided Chemical Engineering 2014;33:1795–800. doi:10.1016/B978-0-444-63455-9.50134-3.

[32] Čuček L, Kravanja Z. Retrofit of Total Site Heat Exchanger Networks by Mathematical Programming Approach. In: Martín M, editor. Alternative Energy Sources and Technologies, Springer International Publishing; 2016, p. 297–340. doi:10.1007/978-3-319-28752-2_11.

[33] Tan RR, Foo DCY. Pinch analysis approach to carbon-constrained energy sector planning. Energy 2007;32:1422–9. doi:10.1016/j.energy.2006.09.018.

[34] Crilly D, Zhelev T. Emissions targeting and planning: An application of CO2 emissions pinch analysis (CEPA) to the Irish electricity generation sector. Energy 2008:1498–507. doi:10.1016/j.energy.2008.05.015.

[35] Ooi REH, Foo DCY, Tan RR, Ng DKS, Smith R. Carbon Constrained Energy Planning (CCEP) for Sustainable Power Generation Sector with Automated Targeting Model. Industrial & Engineering Chemistry Research 2013;52:9889–96. doi:10.1021/ie4005018.

[36] Ooi REH, Foo DCY, Tan RR. Targeting for carbon sequestration retrofit planning in the power generation sector for multi-period problems. Applied Energy 2014;113:477–87. doi:10.1016/j.apenergy.2013.07.047.

[37] Lee J-Y, Tan RR, Chen C-L. A unified model for the deployment of carbon capture and storage. Applied Energy 2014;121:140–8. doi:10.1016/j.apenergy.2014.01.080.

[38] Atkins MJ, Morrison AS, Walmsley MRW. Carbon Emissions Pinch Analysis (CEPA) for emissions reduction in the New Zealand electricity sector. Applied Energy 2010;87:982–7. doi:10.1016/j.apenergy.2009.09.002.

[39] Walmsley MRW, Walmsley TG, Atkins MJ, Kamp PJJ, Neale JR. Minimising carbon emissions and energy expended for electricity generation in New Zealand through to 2050. Applied Energy 2014;135:656–665. doi:10.1016/j.apenergy.2014.04.048.

[40] Hall CAS, Cleveland CJ, Kaufmann RK. Energy and resource quality: the ecology of the economic process. Boulder, USA: University Press of Colorado; 1992.

[41] Hall CAS. Energy Return on Investment: A Unifying Principle for Biology, Economics, and Sustainability. vol. 36. Cham, Switzerland: Springer International Publishing; 2017. doi:10.1007/978-3-319-47821-0_1.

[42] Hall CAS, Lambert JG, Balogh SB. EROI of different fuels and the implications for society. Energy Policy 2014;64:141–52. doi:10.1016/j.enpol.2013.05.049.

[43] Lambert JG, Hall CAS, Balogh S, Gupta A, Arnold M. Energy, EROI and quality of life. Energy Policy 2014;64:153–67. doi:10.1016/j.enpol.2013.07.001.

[44] Weißbach D, Ruprecht G, Huke A, Czerski K, Gottlieb S, Hussein A. Energy intensities, EROIs (energy returned on invested), and energy payback times of electricity generating power plants. Energy 2013;52:210–21. doi:10.1016/j.energy.2013.01.029.

[45] Murphy DJ. The implications of the declining energy return on investment of oil production. Philosophical Transactions of the Royal Society A: Mathematical, Physical and Engineering Sciences 2014;372:20130126. doi:10.1098/rsta.2013.0126.

[46] Heun MK, de Wit M. Energy return on (energy) invested (EROI), oil prices, and energy transitions. Energy Policy 2012;40:147–58. doi:10.1016/j.enpol.2011.09.008.

[47] Hall CAS, Balogh S, Murphy DJR. What is the Minimum EROI that a Sustainable Society Must Have? Energies 2009;2:25–47. doi:10.3390/en20100025.

[48] Shenoy UV. Heat exchanger network synthesis: process optimization by energy and resource analysis. Houston, USA: Gulf Professional Publishing; 1995.

[49] Escobar M, Trierweiler JO. Optimal heat exchanger network synthesis: A case study comparison. Applied Thermal Engineering 2013;51:801–26. doi:10.1016/j.applthermaleng.2012.10.022.

[50] Ait-Ali MA, Wilde DJ. Optimal area allocation in multistage heat exchanger systems. Journal of Heat Transfer 1980;102:199–201. doi:10.1115/1.3244260.

[51] Walmsley MRW, Lal N, Walmsley TG, Atkins MJ. A Modified Energy Transfer Diagram for Improved Retrofit Bridge Analysis. Chemical Engineering Transactions 2017;61:907–12. doi:10.3303/CET1761149.

[52] Lal NS, Walmsley TG, Walmsley MRW, Atkins MJ, Neale JR. A Novel Heat Exchanger Network Bridge Retrofit Method using the Modified Energy Transfer Diagram. Energy 2018;submitted manuscript.

[53] Aspelund A, Berstad DO, Gundersen T. An Extended Pinch Analysis and Design procedure utilizing pressure based exergy for subambient cooling. Applied Thermal Engineering 2007;27:2633–49. doi:10.1016/j.applthermaleng.2007.04.017.

[54] Marmolejo-Correa D, Gundersen T. New Graphical Representation of Exergy Applied to Low Temperature Process Design. Industrial & Engineering Chemistry Research 2013;52:7145–56. doi:10.1021/ie302541e.

[55] Xu T, Flapper J. Reduce energy use and greenhouse gas emissions from global dairy processing facilities. Energy Policy 2011;39:234–47. doi:10.1016/j.enpol.2010.09.037.

[56] Moejes SN, van Boxtel AJB. Energy saving potential of emerging technologies in milk powder production. Trends in Food Science & Technology 2017. doi:10.1016/j.tifs.2016.10.023.

[57] Ramírez CA, Patel M, Blok K. From fluid milk to milk powder: Energy use and energy efficiency in the European dairy industry. Energy 2006;31:1984–2004. doi:10.1016/j.energy.2005.10.014.

[58] Modla G, Lang P. Heat pump systems with mechanical compression for batch distillation. Energy 2013;62:403–17. doi:10.1016/j.energy.2013.09.036.

[59] Janghorban Esfahani I, Kang YT, Yoo C. A high efficient combined multi-effect evaporation–absorption heat pump and vapor-compression refrigeration part 1: Energy and economic modeling and analysis. Energy 2014;75:312–26. doi:10.1016/j.energy.2014.07.081.

[60] Reddick C, Sorin M, Sapoundjiev H, Aidoun Z. Carbon capture simulation using ejectors for waste heat upgrading. Energy 2016;100:251–61. doi:10.1016/j.energy.2016.01.099.

[61] Townsend DW, Linnhoff B. Heat and power networks in process design. Part I: Criteria for placement of heat engines and heat pumps in process networks. AIChE Journal 1983;29:742–8. doi:10.1002/aic.690290508.

[62] Reay D. A selection of heat recovery applications illustrated by means of case studies. Journal of Heat Recovery Systems 1982;2:401–18. doi:10.1016/0198-7593(82)90028-5.

[63] Walmsley TG, Walmsley MRW, Atkins MJ, Neale JR. Fouling and pressure drop analysis of milk powder deposition on the front of parallel fins. Advanced Powder Technology 2013;24:780–5. doi:10.1016/j.apt.2013.04.004.

[64] Liew PY, Walmsley TG. Heat pump integration for total site waste heat recovery. Chemical Engineering Transactions 2016;52:817–22. doi:10.3303/CET1652137.

[65] Walmsley TG, Atkins MJ, Tarighaleslami AH, Liew PY. Assisted heat transfer and shaft work targets for increased total site heat integration. Chemical Engineering Transactions 2016;52:403–8. doi:10.3303/CET1652068.

[66] Khanam S, Mohanty B. Energy reduction schemes for multiple effect evaporator systems. Applied Energy 2010;87:1102–11. doi:10.1016/j.apenergy.2009.05.003.

[67] Smith R. Chemical process design and integration. New York, USA: John Wiley and Sons; 2005.

[68] Hanneman H, Robertson LJ. Heat recovery systems. Energy Use in Dairy Processing, Brussels, Belgium: International Dairy Federation; 2005.

[69] Atkins MJ, Walmsley MRW, Walmsley TG, Neale JR. Targeting using process integration for large industrial sites operating non-continuously. Chemeca 2012, Wellington, New Zealand: IChemE; 2012.

[70] Walmsley TG, Walmsley MRW, Atkins MJ, Neale JR. Integration of industrial solar and gaseous waste heat into heat recovery loops using constant and variable temperature storage. Energy 2014;75:53–67. doi:10.1016/j.energy.2014.01.103.

[71] Walmsley MRW, Atkins MJ, Riley J. Thermocline Management of Stratified Tanks for Heat Storage. Chemical Engineering Transactions 2009;18:231–6. doi:10.3303/CET0918036.

[72] Atkins MJ, Walmsley MRW, Neale JR. The challenge of integrating non-continuous processes – milk powder plant case study. Journal of Cleaner Production 2010;18:927–34. doi:10.1016/j.jclepro.2009.12.008.

[73] Atkins MJ, Walmsley MRW, Neale JR. Process integration between individual plants at a large dairy factory by the application of heat recovery loops and transient stream analysis. Journal of Cleaner Production 2012;34:21–8. doi:10.1016/j.jclepro.2012.01.026.

[74] Walmsley MRW, Walmsley TG, Atkins MJ, Neale JR. Area Targeting and Storage Temperature Selection for Heat Recovery Loops. CET 2012;29:1219–24. doi:10.3303/CET1229204.

[75] Walmsley MRW, Walmsley TG, Atkins MJ, Neale JR. Methods for improving heat exchanger area distribution and storage temperature selection in heat recovery loops. Energy 2013;55:15–22. doi:10.1016/j.energy.2013.02.050.

[76] Walmsley TG, Walmsley MRW, Tarighaleslami AH, Atkins MJ, Neale JR. Integration options for solar thermal with low temperature industrial heat recovery loops. Energy 2015;90, Part 1:113–21. doi:10.1016/j.energy.2015.05.080.

[77] Tarighaleslami AH, Walmsley TG, Walmsley MRW, Atkins MJ, Neale JR. Heat Transfer Enhancement in Heat Recovery Loops Using Nanofluids as the Intermediate Fluid. Chemical Engineering Transactions 2015;45:991–6. doi:10.3303/CET1545166.

[78] Chang C, Chen X, Wang Y, Feng X. An efficient optimization algorithm for waste Heat Integration using a heat recovery loop between two plants. Applied Thermal Engineering 2016. doi:10.1016/j.applthermaleng.2016.04.079.

[79] Duran MA, Grossmann IE. Simultaneous Optimsation and Heat Integration of Chemical Processes. AIChE Journal 1986;32:123–38.

[80] Marechal F, Kalitventzeff B. Targeting the integration of multi-period utility systems for site scale process integration. Applied Thermal Engineering 2003;23:1763–84. doi:10.1016/S1359-4311(03)00142-X.

[81] Gassner M, Maréchal F. Thermo-economic Process Model for Thermochemical Production of Synthethic Natural Gas (SNG) from Lignocellulosic Biomass. Biomass Energy 2009;33:1587–604.

[82] Baliban RC, Elia JA, Floudas CA. Optimization Framework for the Simultaneous Process Synthesis, Heat and Power Integration of a Thermochemical Hybrid Biomass,. Computer & Chemical Engineering 2011;35:1647–90.

[83] Ng RTL, Tay DHS, Ng DKS. Simultaneous Process Synthesis, Heat and Power Integration in a Sustainable Integrated Biorefinery. Energy and Fuel 2012;26:7316–30.

[84] Kong Q, Shah N. Development of an Optimization-Based Framework for Simultaneous Process Synthesis and Heat Integration. Industrial & Engineering Chemistry Research 2017;56:5000–13.

[85] Klemeš JJ, Smith R, Kim JK. Handbook of water and energy management in food processing. Cambridge, UK: Woodhead Publishing; 2008.

[86] Walmsley TG, Atkins MJ, Walmsley MRW, Neale JR. Appropriate placement of vapour recompression in ultra-low energy industrial milk evaporation systems using Pinch Analysis. Energy 2016;116, Part 2:1269–81. doi:10.1016/j.energy.2016.04.026.

[87] Walmsley TG, Walmsley MRW, Atkins MJ, Neale JR, Tarighaleslami AH. Thermo-economic optimisation of industrial milk spray dryer exhaust to inlet air heat recovery. Energy 2015;90, Part 1:95–104. doi:10.1016/j.energy.2015.03.102.

[88] Walmsley TG, Atkins MJ, Walmsley MRW, Neale JR, Philipp M, Peesel RH, et al. Total Site utility systems optimisation for milk powder production. Chemical Engineering Transactions 2016;52:235–40. doi:10.3303/CET1652040.

[89] Walmsley MRW, Atkins MJ, Walmsley TG. Application of Heat Recovery Loops to Semi-continuous Processes for Process Integration. In: Klemeš J, editor. Handbook of Process Integration (PI). 1st ed., Cambridge, UK: Woodhead Publishing; 2013, p. 594–630.

[90] Aflaki S, Netessine S. Strategic Investment in Renewable Energy Sources: The Effect of Supply Intermittency. Manufacturing & Service Operations Management 2017;19:489–507. doi:10.1287/msom.2017.0621.

[91] Tanzil D, Beloff BR. Assessing impacts: Overview on sustainability indicators and metrics. Environmental Quality Management 2006;15:41–56. doi:10.1002/tqem.20101.

[92] Klemeš JJ, editor. Assessing and Measuring Environmental Impact and Sustainability. Oxford, UK: Elsevier; 2015. doi:10.1016/B978-0-12-799968-5.00017-8.

[93] Čuček L, Klemeš JJ, Kravanja Z. A Review of Footprint analysis tools for monitoring impacts on sustainability. Journal of Cleaner Production 2012;34:9–20. doi:10.1016/j.jclepro.2012.02.036.

[94] Narula K, Reddy BS. A SES (sustainable energy security) index for developing countries. Energy 2016;94:326–43. doi:10.1016/j.energy.2015.10.106.

[95] Ha-Duong M, Loisel R. Actuarial Assessment of Fatalities Attributable to CCS in 2050. Energy Procedia 2013;37:7526–36. doi:10.1016/j.egypro.2013.06.696.

[96] Kılkış Ş. Sustainable development of energy, water and environment systems index for Southeast European cities. Journal of Cleaner Production 2016;130:222–34. doi:10.1016/j.jclepro.2015.07.121.

[97] Walmsley TG, Varbanov PS, Klemeš JJ. Networks for utilising the organic and dry fractions of municipal waste: P-graph approach. Chemical Engineering Transactions 2017;61:1357–62. doi:10.3303/CET1761224.

[98] P-graph Studio. P-graph Studio. P-Graph 2017. p-graph.com (accessed December 7, 2017).

[99] Walmsley MRW, Walmsley TG, Atkins MJ, Kamp PJJ, Neale JR, Chand A. Carbon Emissi+ons Pinch Analysis for emissions reductions in the New Zealand transport sector through to 2050. Energy 2015;92, Part 3:569–76. doi:10.1016/j.energy.2015.04.069.

[100] Walmsley MRW, Walmsley TG, Matthews L, Atkins MJ, Neale JR, Kamp PJJ. Pinch analysis techniques for carbon emissions reduction in the New Zealand industrial process heat sector. Chemical Engineering Transactions 2015;45:1087–1092. doi:10.3303/CET1545182.

[101] Mason IG, Page SC, Williamson AG. A 100% renewable electricity generation system for New Zealand utilising hydro, wind, geothermal and biomass resources. Energy Policy 2010;38:3973–84. doi:10.1016/j.enpol.2010.03.022.

[102] Boccard N. Capacity factor of wind power realized values vs. estimates. Energy Policy 2009;37:2679–88. doi:10.1016/j.enpol.2009.02.046.

[103] MBIE. Electricity Demand and Generation Scenarios 2017. www.mbie.govt.nz/info-services/sectors-industries/energy/energy-data-modelling/modelling/electricity-demand-and-generation-scenarios/ (accessed September 1, 2018).

[104] MED. New Zealand Energy Strategy. Ministry of Economic Development 2013. www.med.govt.nz/sectors-industries/energy/energy-modelling/modelling (accessed May 13, 2013).

LIST OF APPENDED ARTICLES

Article 1: Walmsley, T.G., Walmsley, M.R.W., Morrison, A.S., Atkins, M.J., Neale, J.R., 2014. A derivative based method for cost optimal area allocation in heat exchanger networks. Applied Thermal Engineering 70, 1084–1096. DOI: 10.1016/j.applthermaleng.2014.03.044

Article 2: Lal, N., Walmsley, T.G., Walmsley, M.R.W., Atkins, M.J., Neale, J.R., 2018. A Novel Heat Exchanger Network Bridge Retrofit Method using the Modified Energy Transfer Diagram. Energy, accepted article.

Article 3: Hamsani, M.N., Walmsley, T.G., Liew, P.Y., Wan Alwi, S.R., 2018. Combined Numerical Pinch and Exergy Analysis for Low Temperature Heat Exchanger Network. Energy, 153, 100-112. DOI: 10.1016/j.energy.2018.04.023

Article 4: Walmsley, T.G., Atkins, M.J., Walmsley, M.R.W., Neale, J.R., 2016. Appropriate placement of vapour recompression in ultra-low energy industrial milk evaporation systems using Pinch Analysis. Energy 116, Part 2, 1269–1281. DOI: 10.1016/j.energy.2016.04.026

Article 5: Walmsley, T.G., Walmsley, M.R.W., Atkins, M.J., Neale, J.R., Tarighaleslami, A.H., 2015. Thermo-economic optimisation of industrial milk spray dryer exhaust to inlet air heat recovery. Energy 90, Part 1, 95–104. DOI: 10.1016/j.energy.2015.03.102

Article 6: Walmsley, T.G., Walmsley, M.R.W., Atkins, M.J., Neale, J.R., Sellers, C.M., 2014. An experimentally validated criterion for skim milk powder deposition on stainless steel surfaces. Journal of Food Engineering 127, 111–119. DOI: 10.1016/j.jfoodeng.2013.11.025

Article 7: Walmsley, T.G., Walmsley, M.R.W., Atkins, M.J., Neale, J.R., 2015. Analysis of skim milk powder deposition on stainless steel tubes in cross-flow. Applied Thermal Engineering 75, 941–949. DOI: 10.1016/j.applthermaleng.2014.10.066

Article 8: Liew, P.Y., Walmsley, T.G., Wan Alwi, S.R., Abdul Manan, Z., Klemeš, J.J., Varbanov, P.S., 2016. Integrating district cooling systems in Locally Integrated Energy Sectors through Total Site Heat Integration. Applied Energy 184, 1350–1363. DOI: 10.1016/j.apenergy.2016.05.078

Article 9: Walmsley, T.G., 2016. A Total Site Heat Integration design method for integrated evaporation systems including vapour recompression. Journal of Cleaner Production 136, Part B, 111–118. DOI: 10.1016/j.jclepro.2016.06.044

Article 10: Tarighaleslami, A.H., Walmsley, T.G., Atkins, M.J., Walmsley, M.R.W., Liew, P.Y., Neale, J.R., 2017. A Unified Total Site Heat Integration targeting method for isothermal and non-isothermal utilities. Energy 119, 10–25. DOI: 10.1016/j.energy.2016.12.071

Article 11: Ong, B.H.Y., Walmsley, T.G., Atkins, M.J., Walmsley, M.R.W., 2017. Total site mass, heat and power integration using process integration and process graph. Journal of Cleaner Production 167, 32–43. DOI: 10.1016/j.jclepro.2017.08.035

Article 12: Walmsley, T.G., Walmsley, M.R.W., Atkins, M.J., Neale, J.R., 2013. Improving energy recovery in milk powder production through soft data optimisation. Applied Thermal Engineering 61, 80–87. DOI: 10.1016/j.applthermaleng.2013.01.051

Article 13: Walmsley, T.G., Atkins, M.J., Walmsley, M.R.W., Philipp, M., Peesel, R.-H., 2018. Process and utility systems integration and optimisation for ultra-low energy milk powder production. Energy 146, 67–81. DOI: 10.1016/j.energy.2017.04.142

Article 14: Walmsley, T.G., Walmsley, M.R.W., Atkins, M.J., Neale, J.R., 2014. Integration of industrial solar and gaseous waste heat into heat recovery loops using constant and variable temperature storage. Energy 75, 53–67. DOI: 10.1016/j.energy.2014.01.103

Article 15: Walmsley, T.G., Philipp, M., Varbanov, P.S., Klemeš, J.J., 2018. Total Site Utility Systems Structural Design Considering Electricity Price Fluctuations. Computer-Aided Chemical Engineering, accepted article.

Article 16: Walmsley, M.R.W., Walmsley, T.G., Atkins, M.J., Kamp, P.J.J., Neale, J.R., 2014. Minimising carbon emissions and energy expended for electricity generation in New Zealand through to 2050. Applied Energy 135, 656–665. DOI: 10.1016/j.apenergy.2014.04.048

Article 17: Walmsley, M.R.W., Walmsley, T.G., Atkins, M.J., Kamp, P.J.J., Neale, J.R., Chand, A., 2015. Carbon Emissions Pinch Analysis for emissions reductions in the New Zealand transport sector through to 2050. Energy 92, Part 3, 569–576. DOI: 10.1016/j.energy.2015.04.069

Article 18: Walmsley, T.G., Walmsley, M.R.W., Atkins, M.J., 2017. Energy Return on energy and carbon investment of wind energy farms: A case study of New Zealand. Journal of Cleaner Production 167, 885-895. DOI: 10.1016/j.jclepro.2017.08.040